昆山奥兰克泵业制造有限公司
AULANK PUMPS MANUFACTURING CO.,LTD.

昆山公司 **KUNSHAN COMPANY**
地址/Add：江苏省昆山市巴城镇东荣路151号
151 Dongrong Road, Bacheng Town, Kunshan City, Jiangsu Province
电话/ Tel：+86-512-55193403 55199569 55199169
传真/Fax：+86-512-55193433
www.alkclb.com

广东办事处 **GUANGDONG OFFICE**
地址/Add：广东省深圳市宝安区松岗镇东方大道田洋三路9号
#9 SanYang Road ,DongFang Street, SongGang Town, BaoAn District,
ShenZhen City ,GuangDong Province
电话/ Tel：13480652339 13828785862
传真/Fax：+86-755-27737236
www.szalk.com.cn

-196°C~+400°C High & low Temperature Chemical Pump Professional Manufacturino

-196°C~+400°C化工高低温泵浦

AULANK PUMPS MANUFACTURING

奥兰克泵业

2023

AULANK PUMPS

MANUFACTURING CO.,LTD.

ABOUT US
关于我们

昆山奥兰克泵业制造有限公司成立于 2008 年，位于江苏省昆山市，是集研发、制造、销售、服务为一体的化工高低温泵类产品专业制造服务商。

公司产品包括旋涡磁力泵、轻型离心磁力泵、化工离心磁力泵、衬氟磁力泵、精密旋涡泵、大流量离心泵、小型高压叶片泵、不锈钢多级泵、立式管道泵等；产品耐温范围从低温-196℃到高温+400℃，涉及化工、环保、印染、医药、半导体、新能源、汽车、电子、军工、食品、石油和通用机械等行业领域。

公司以“专注技术创新、制造优质产品、提供专业服务”为核心竞争力，不断精进公司管理水平和产品体系，先后获得国家高新技术企业、江苏省民营科技企业、苏州市瞪羚入库企业、昆山市专精特新企业等荣誉；并执行欧盟CE认证安全标准、ISO9001:2015（CQC）质量管理体系；同时拥有50多项自有技术专利认证。

展望未来，奥兰克泵业不断创新产品与服务，致力于为客户创造价值，希望与各界朋友携手合作，共同发展！

奥兰克泵业真诚欢迎新老客户的惠顾！

Kunshan Aulank Pump Manufacturing Co., Ltd., established in 2008 and located in Kunshan City, Jiangsu Province, it's a professional manufacturer of chemical high and low temperature pumps integrating technology R & D, manufacturing, sales and service.

The Aulank pumps include vortex magnetic pump, light centrifugal magnetic pump, chemical centrifugal magnetic pump, fluorine lined magnetic pump, precision vortex pump, large flow centrifugal pump, small high-pressure vane pump, stainless steel multistage pump, vertical pipeline pump, etc; The temperature resistance range of products ranges from low temperature − 196 ° C to high temperature + 400 ° C, involving chemical industry, environmental protection, printing and dyeing, medicine, semiconductor, new energy, automobile, electronics, military industry, food, petroleum, general machinery and other industries.

Taking "focusing on technological innovation, manufacturing high-quality products and providing professional services" as the core competitiveness, the Aulank has continuously improved the management level and product system of the Aulank and has successively won the honors of national high-tech enterprise, Jiangsu private science and technology enterprise, Suzhou Dengling warehousing enterprise, Kunshan specialized, refined and new enterprise and so on; And implement the EU CE certification safety standard and iso9001:2015 (CQC) quality management system; At the same time, Aulank has more than 50 self owned technology patent certification.

Looking forward to the future, Aulank pump industry continues to innovate products and services and is committed to creating value for customers. We hope to cooperate with friends from all walks of life for common development!

Aulank pump sincerely welcome new and old customers to patronage!

SERVICE
服务

INNOVATION
创新

INTEGRITY
诚信

QUALITY
品质

CONCENTRATION
专注

AULANK PUMPS / CULTURE 企业文化

愿景 Vision

成为全球泵业知名品牌，流体安全输送的领导者，制造世界一流泵类产品
Becoming famous brand in the global pump industry and the leader of safe fluid transportation, manufacturing world’s first-class pumps.

使命 Mission

专注泵类产品研发制造，推动中国工业创新发展，服务全球工业装备

Concentrating on the pumps’ researching and producing , driving innovative development of the Chinese industry , serve global industrial equipment .

价值观 VALUE

品牌服务客户，感恩成就梦想，耕耘回馈社会

Brand serve customers , thanksgiving achieve dreams, hard working give back society .

核心竞争力 CORE COMPETENCE

专注技术创新，制造优质产品，提供专业服务

Pursue technology innovation continuously ;Supply quality products forever ; Having professional service team

经营理念 MANAGING PRINCIPLE

创新、品质、诚信、专注、服务

Innovation 、Quality、Integrity 、Concentration 、Service

QUALIFICATION AND HONOR
荣誉和资质

公司以“专注技术创新、制造优质产品、提供专业服务”为核心竞争力，不断精进公司管理水平和产品体系，先后获得江苏省高新技术企业、江苏省民营科技企业、江苏省专精特新企业、江苏省名牌产品、苏州市瞪羚企业、苏州市守合同重信用企业、昆山市科技研发中心、昆山市技术工程研究中心等荣誉等。

拥有发明专利及实用新型专利52项，外观设计专利15项，公司全系列产品通过CE认证，并获得ISO9001质量管理体系认证。

Aulank takes "focusing on technological innovation, manufacturing quality products and providing professional services" as its core competitiveness, and constantly improves our management level and product system. We have successively won the many honors ,such as Jiangsu High-tech Enterprise, Jiangsu Private Science and Technology Enterprise, Jiangsu Specialized and Special New Enterprise, Jiangsu Famous Brand Product, Suzhou Gazelle Enterprise, Suzhou Contract-abiding and creditworthy Enterprise, Kunshan Science and Technology Research and Development Center, Kunshan Technology Engineering Research Center, etc.

Aulank ownes 52 invention patents and utility model patents and 15 design patents. Our products have passed and obtained CE certification & ISO9001 quality management system certification

NINE SERVICES
九大服务

AULANK PUMPS
MANUFACTURING CO.,LTD.

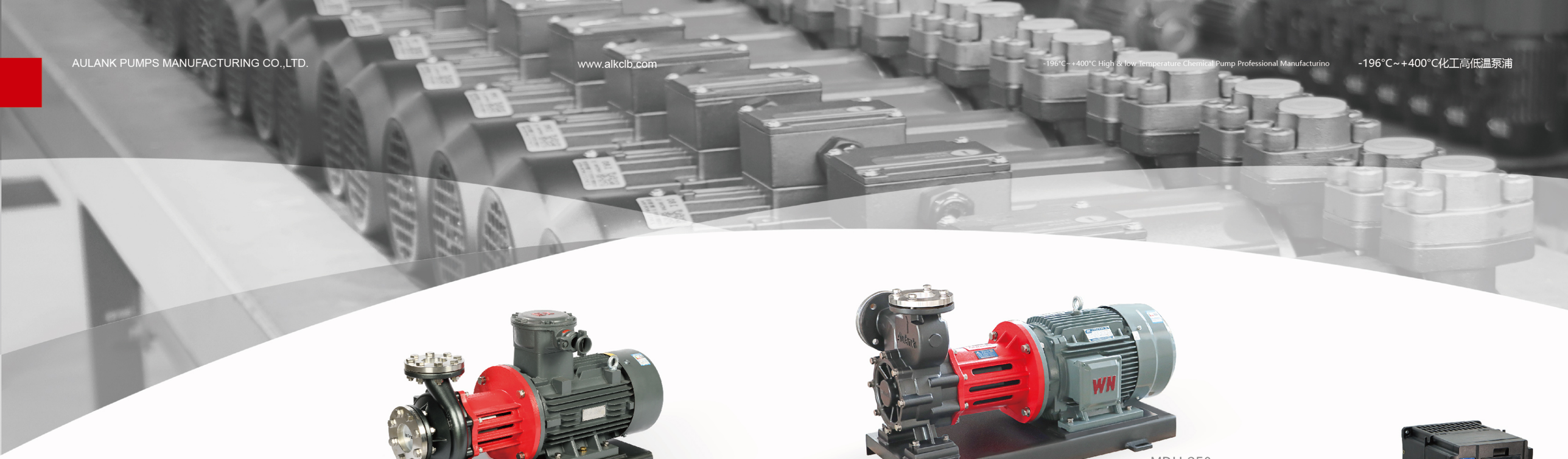

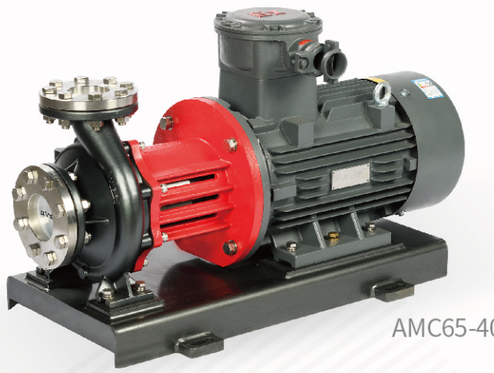

AMC65-40-200EX

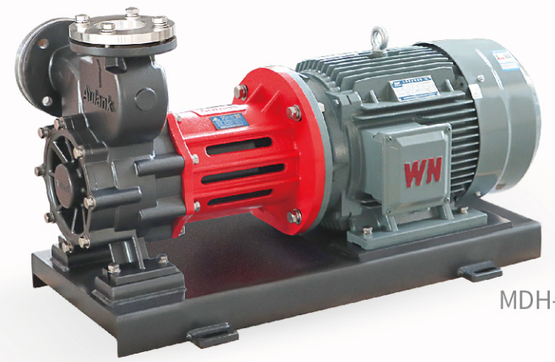

MDH-250

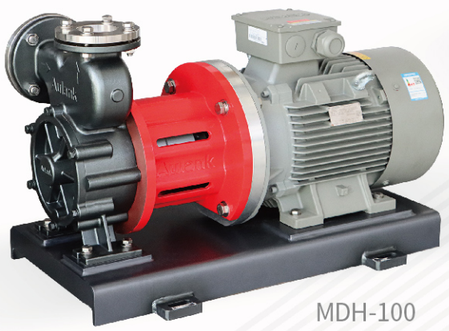

MDH-100

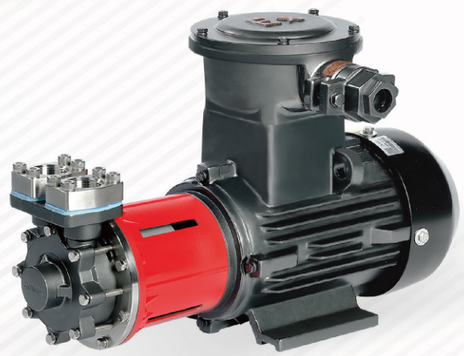

MDW-23EX

MDW-15EM

AULANK
PUMPS MANUFACTURING
奥兰克泵业

SPECIAL TAILOR-MADE
特殊定制

- IE4超高效
  IE4 is super efficient
- 同步永磁(IE5)
  Synchronous permanent magnet (IE5)
- 电压、频率
  Voltage and frequency
- 变频
  Frequency conversion
- 参数、材质
  Parameters and materials
- 防爆
  explosion-proof
- OEM定制
  OEM customization
- 其它个型定制
  Other types of customization

DIRECTORY
目录

AMC
CHEMICAL STANDARD MAGNETIC PUMP
化工标准磁力泵

化工标准 | 大流量 | 耐腐蚀 | 耐高温+400℃ | 耐低温-196℃ | 不锈钢 | 低噪音 | 振动小 | 安全可靠

AMC80-65-160A

AMC系列无泄漏磁力驱动离心泵，是新型的磁力驱动化工流程泵，产品设计执行HG/T2730标准，采用高密集型组合拉推磁路作为磁力传动结构；高效的水力、高性能的磁钢、高强度的传动部件、耐腐蚀的过流部件等先进技术工艺。产品可同时满足无泄漏场所物料输送、高低温介质输送的使用需求，可完全替代屏蔽电泵和大部分轴封泵。

应用领域：石油化工、医药中间体、原料药及中药提取剂、化工助剂等精细化工领域，危废处理、水处理等环保领域。

循环介质：不含颗粒、纤维的水、乙二醇、乙醇、合成油、导热油、硅油、冰河冷媒、酸、碱、醇、苯、酚、酯各类化学溶液等液体。

AMC series non-leakage magnetic drive centrifugal pump is a new type of magnetic drive chemical process pump. The product design implements the HG/T2730 standard, and adopts a high-intensity combined pull-push magnetic circuit as the magnetic drive structure; high-efficiency hydraulic, high-performance magnetic steel, High-strength transmission parts, corrosion-resistant over-current parts and other advanced technologies. The product can meet the needs of material transportation and high and low temperature medium transportation in leak-free places at the same time, and can completely replace canned electric pumps and most shaft seal pumps.

Application Area: Fine chemical fields such as petrochemicals, pharmaceutical intermediates, raw materials and Chinese medicine extractants, chemical additives, and environmental protection fields such as hazardous waste treatment and water treatment.

Circulation Medium: Liquids such as water, ethylene glycol, ethanol, synthetic oil, heat transfer oil, silicone oil, glacial refrigerant, acid, alkali, alcohol, benzene, phenol, grease and other chemical solutions that do not contain particles and fibers.

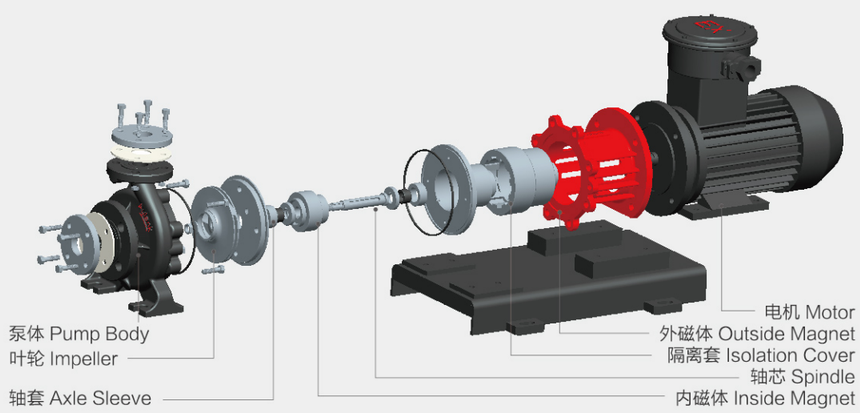

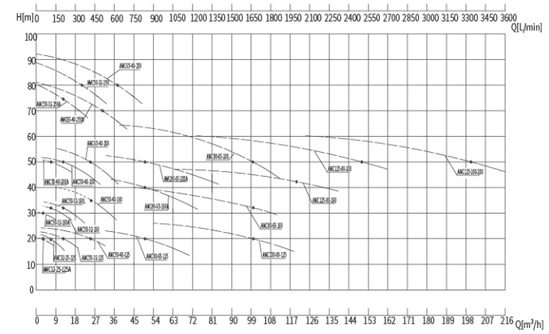

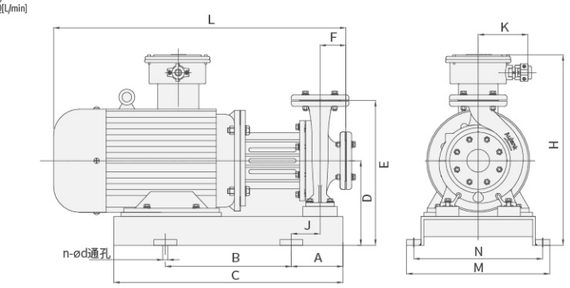

使用条件 / Working Condition

介质温度 Medium Temperature	介质比重 Medium Density	环境温度 Ambient Temperature	最高海拔 Maximum Elevation	最大工作压力 Maximum Working Pressure
-196℃～+400℃	0.6～2.0	-50℃～+70℃	5000m	20bar

规格性能参数 / Technical Parameter

型号/Model	口径/Diameter		电机/Motor					性能参数/Performance Parameter		水力效率 Efficiency (%)
	进口 Inlet	出口 Outlet	功率 Power (kW)	匹数 (Hp)	电压 Voltage (V)	频率 Frequency (Hz)	转速 Speed (r/min)	额定扬程 Rated Head (m)	额定流量 Rated Capacity (m³/h)	
AMC32-25-125A	DN32	DN25	1.5	2	3ø-380	50	2760	20	3.2	42
AMC50-32-160A	DN50	DN32	2.2	3	3ø-380	50	2760	32	3.2	28
AMC32-25-125	DN32	DN25	1.5	2	3ø-380	50	2760	20	6.3	45
AMC50-32-160	DN50	DN32	2.2	3	3ø-380	50	2760	32	6.3	41
AMC50-40-200A	DN50	DN40	5.5	7.5	3ø-380	50	2900	50	6	26
AMC50-32-125	DN50	DN32	3	4	3ø-380	50	2900	20	12.5	52
AMC50-32-160L	DN50	DN32	4	5	3ø-380	50	2900	32	12.5	46
AMC50-40-200	DN50	DN40	7.5	10	3ø-380	50	2900	50	12.5	42
AMC50-32-250A	DN40	DN25	15	20	3ø-380	50	2900	75	12.5	32
AMC50-32-250	DN40	DN25	22	30	3ø-380	50	2900	80	20	40
AMC50-40-125	DN50	DN40	4	5	3ø-380	50	2900	20	25	55
AMC50-40-160	DN50	DN40	7.5	10	3ø-380	50	2900	35	25	59
AMC65-40-200	DN65	DN40	11	15	3ø-380	50	2900	50	25	52
AMC65-40-250A	DN65	DN40	22	30	3ø-380	50	2900	70	30	48
AMC65-40-250	DN65	DN40	30	40	3ø-380	50	2900	80	38	50
AMC80-65-125	DN80	DN65	7.5	10	3ø-380	50	2900	23	50	68
AMC80-65-160A	DN80	DN65	15	20	3ø-380	50	2900	35	50	65
AMC80-65-200A	DN80	DN65	18.5	25	3ø-380	50	2900	50	50	63
AMC100-80-125	DN100	DN80	11	15	3ø-380	50	2900	20	100	73
AMC80-65-160	DN80	DN65	18.5	25	3ø-380	50	2900	32	100	74
AMC80-65-200	DN80	DN65	22	30	3ø-380	50	2900	50	100	73
AMC125-80-160	DN125	DN80	30	40	3ø-380	50	2900	41	120	76
AMC125-80-200	DN125	DN80	37	50	3ø-380	50	2900	50	150	79
AMC125-100-200	DN125	DN100	55	75	3ø-380	50	2900	50	200	80

*上述性能参数对应于水在20℃时以正常速度运输，性能及参数误差±10%。泵的性能随输送流体介质的比重及密度的不同而产生变化。*The above characteristic testing is based on the water transferring with the normal speed under 20 degrees. character'serror is about 10%. The pump characters change according to the difference of the liquid mediums' proportion and density.

安装尺寸表 / Installation Size

型号/Model	A	B	C	D	E	F	J	L	M	N	K	H	n-ød
AMC32-25-125A	100	290	490	180	312	60	45	560	310	280	180	420	4-ø14
AMC50-32-160A	100	320	520	180	355	65	45	590	335	305	180	420	4-ø14
AMC32-25-125	100	290	490	180	312	60	45	560	310	280	180	420	4-ø14
AMC50-32-160	100	320	520	180	355	65	45	590	335	305	180	420	4-ø14
AMC50-40-200A	140	420	700	248	433	77.5	60	740	440	400	205	536	4-ø18
AMC50-32-125	120	345	585	200	360	80	50	680	355	325	205	455	4-ø14
AMC50-32-160L	120	400	640	200	360	80	50	730	355	325	205	455	4-ø14
AMC50-40-200	140	420	700	248	433	77.5	60	790	440	400	205	536	4-ø18
AMC50-40-125	120	410	650	228	413	77.5	40	750	355	325	205	486	4-ø14
AMC50-40-160	140	420	700	248	433	77.5	60	790	440	400	205	536	4-ø18
AMC65-40-200	165	470	800	250	430	99	80	927	480	440	215	585	4-ø18
AMC80-65-125	140	420	700	220	380	100	70.5	787	440	400	205	508	4-ø18
AMC80-65-160A	175	490	840	252	462	90	95	914	490	450	215	587	4-ø18
AMC80-65-200A	180	520	880	252	462	90	100	943	490	450	215	587	4-ø18
AMC100-80-125	165	490	820	252	432	100	83	932	440	490	450	587	4-ø18
AMC80-65-160	180	520	880	252	462	90	100	943	490	450	215	587	4-ø18
AMC80-65-200	180	520	880	272	482	90	100	993	510	470	215	627	4-ø18
AMC125-80-160	180	740	1100	315	565	125	67.5	1256	560	520	255	705	4-ø18
AMC125-80-200	180	740	1100	315	565	125	67.5	1256	560	520	255	705	4-ø18

MDZ
LIGHTWEIGHT CENTRIFUGAL MAGNETIC PUMP
轻型离心磁力泵

耐腐蚀 耐高温+400℃ 耐低温-196℃ 体积小 不锈钢 低噪音 振动小 安全可靠

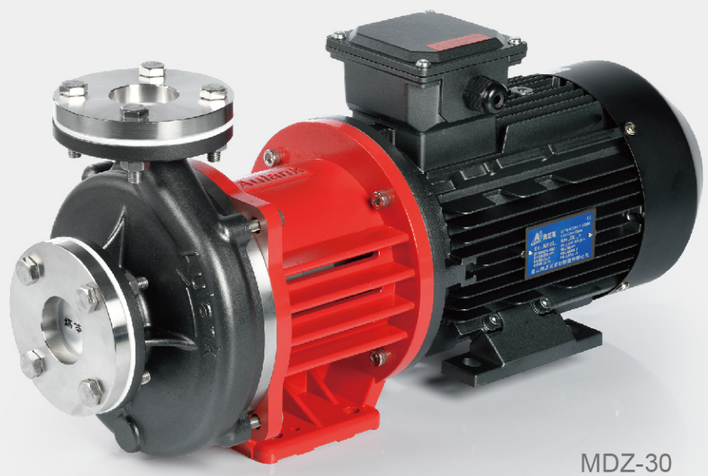

MDZ-30

MDZ系列磁力驱动式高低温离心泵，过流部件为不锈钢或特种钢，产品采用先进的水力、高效的磁性传动结构、新颖的外观设计，实现磁力泵的节能、安全可靠、性能稳定、节省安装空间、寿命久等优点，在中高端应用领域得到广泛应用。

应用领域：高温模具控温、高低温试验仪器、化工设备、模板控温、高端清洗设备、高端印染设备、TCU控温系统、高温冷凝水回收等。

循环介质：不含颗粒、纤维的水、乙二醇、酒精、导热油、碳氢溶液、硅油、冰河冷媒、汽油、染料、化学溶液等液体。

MDZ series magnetic drive high and low-temperature centrifugal pump, its flow parts are stainless steel or special steel. MDZ pump adopts advanced hydraulic, high-efficiency magnetic transmission structure, novel appearance design, it comes true the energy-saving, safety, and reliability, stable performance, save installation space and long life, etc., MDZ pumps are widely used in middle high-end fields

Application Area: High temperature mold temperature control ling, High and low temperature test instrument, Chemical equipment,Template temperature controlling, High end cleaning equipment, High end printing and dyeing equipment, TCU, High temperature condensate recycle.

Circulation Medium: Water, ethylene glycol, alcohol, thermal oil, hydrocarbon solution, silicone oil, refrigerant gasoline，dyestuff，chemical solution and other liquids without particles and fibers.

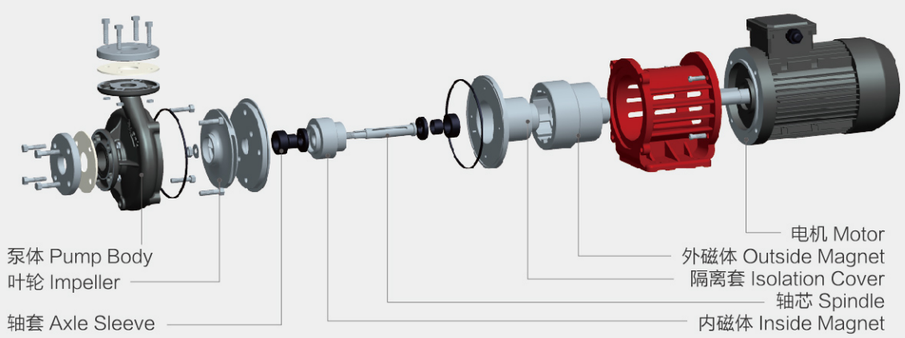

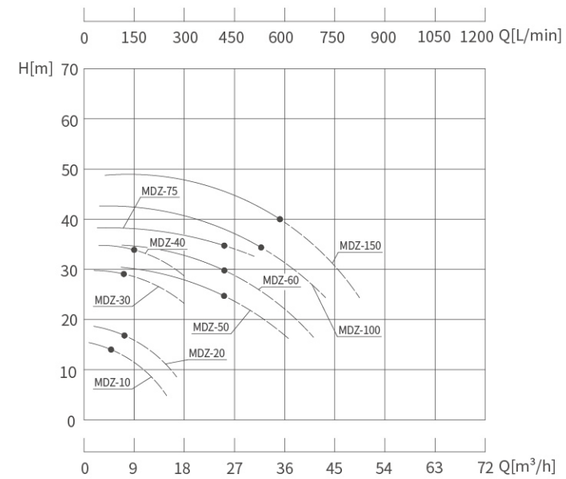

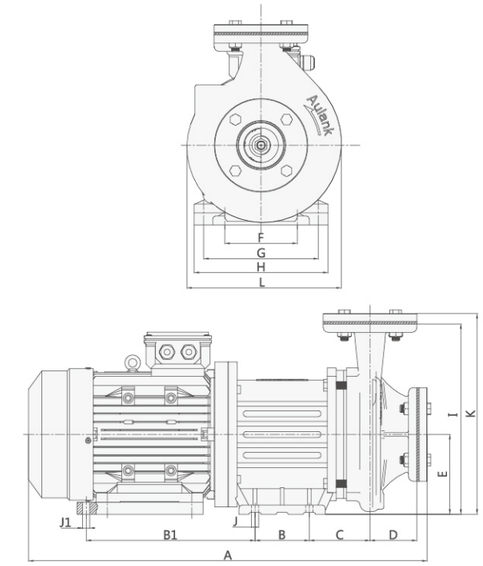

使用条件 / Working Condition

介质温度 Medium Temperature	介质比重 Medium Density	环境温度 Ambient Temperature	最高海拔 Maximum Elevation	最大工作压力 Maximum Working Pressure
-196℃～+400℃	0.6～2.0	-50℃～+70℃	5000m	20bar

规格性能参数 / Technical Parameter

型号/Model	口径/Diameter		电机/Motor					性能参数/Performance Parameter		泵浦自重 Pump Weight (kg)
	进口 Inlet	出口 Outlet	功率 Power (kW)	匹数 (Hp)	电压 Voltage (V)	频率 Frequency (Hz)	转速 Speed (r/min)	额定扬程 Rated Head (m)	额定流量 Rated Capacity (m³/h)	
MDZ-10	DN32	DN25	0.75	1	3Ø-380	50	2760	15	4	28
MDZ-20	DN32	DN25	1.5	2	3Ø-380	50	2760	18	6	30
MDZ-30	DN50	DN32	2.2	3	3Ø-380	50	2760	30	6.3	42
MDZ-40	DN50	DN32	3	4	3Ø-380	50	2900	35	9	45
MDZ-50	DN50	DN40	4	5	3Ø-380	50	2900	25	25	60
MDZ-60	DN50	DN40	4.5	6	3Ø-380	50	2900	30	25	65
MDZ-75	DN50	DN40	5.5	7.5	3Ø-380	50	2900	35	25	87
MDZ-100	DN50	DN40	7.5	10	3Ø-380	50	2900	35	32	118
MDZ-150	DN50	DN40	11	15	3Ø-380	50	2900	40	35	148

*上述性能参数对应于水在20℃时以正常速度运输，性能及参数误差±10%。泵的性能随输送流体介质的比重及密度的不同而产生变化。

*The above characteristic testing is based on the water transferring with the normal speed under 20 degrees. character'serror is about 10%. The pump characters change according to the difference of the liquid mediums' proportion and density.

安装尺寸表 / Installation Size

型号/Model	A	B	C	B1	D	E	F	G	H	I	K	J	J1	L
MDZ-10	503	70	72	-	50	100	100	-	-	224	239	4-Ø12	-	180
MDZ-20	503	70	72	-	50	100	100	-	-	224	239	4-Ø12	-	180
MDZ-30	562	70	72	256	55	110	100	140	180	245	261	4-Ø12	2-Ø10	205
MDZ-40	592	70	72	256	55	110	100	140	180	245	261	4-Ø12	2-Ø10	205
MDZ-50	660	90	100	280	77	132	120	190	220	315	332	4-Ø12	2-Ø10	255
MDZ-60	660	90	100	280	77	132	120	190	220	315	332	4-Ø12	2-Ø10	255
MDZ-75	716	90	100	263	77	132	120	215	220	315	332	4-Ø12	2-Ø10	255
MDZ-100	800	90	100	263	99	132	120	215	220	298	315	4-Ø12	4-Ø14	275
MDZ-150	800	90	100	263	99	132	120	215	220	298	315	4-Ø12	4-Ø14	275

MDH

STAINLESS STEEL VORTEX MAGNETIC PUMP

不锈钢旋涡磁力泵

耐腐蚀 耐高温+400°C 耐低温-196°C 体积小 不锈钢316 低噪音 振动小 安全可靠 气液混合

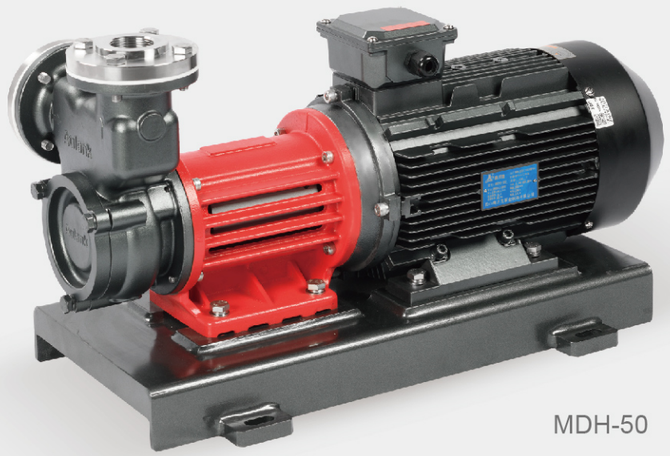

MDH-50

MDH磁力驱动高低温旋涡泵，过流部件材质为不锈钢，具备一定的气液混合功能。产品采用无轴封、磁力驱动设计，将动密封转换为静密封，实现泵浦在深冷和高温工况下的安全性和稳定性。

应用领域：高温模具控温、高低温试验仪器、半导体精密控温、化工设备、模板控温、超声波清洗设备、高端印染设备、TCU控温系统等。

循环介质：不含颗粒、纤维的水、乙二醇、酒精、导热油、碳氢溶液、硅油、冰河冷媒、汽油、染料、化学溶液、液氮等液体。

MDH series magnetic drive high and low temperature vortex magnetic pump, its flow passage parts are made of stainless steel, it has a certain gas-liquid mixing function. MDH series magnetic pump is designed with no shaft seal and worked by magnetic drive, which converts dynamic seal into static seal to realize the safety and stability of the pump under cryogenic and high temperature conditions.

Application Area: High temperature mold temperature controlling, High and low temperature test instrument, Semiconductor precision temperature control. Chemical equipment,Template temperature controlling ,Ultrasonic cleaning equipment, High end printing and dyeing equipment, TCU.

Circulation Medium: Water, ethylene glycol, alcohol, thermal oil, hydrocarbon solution, silicone oil, refrigerant gasoline, dyestuff, chemical solution , liquid nitrogen and other liquids without particles and fibers.

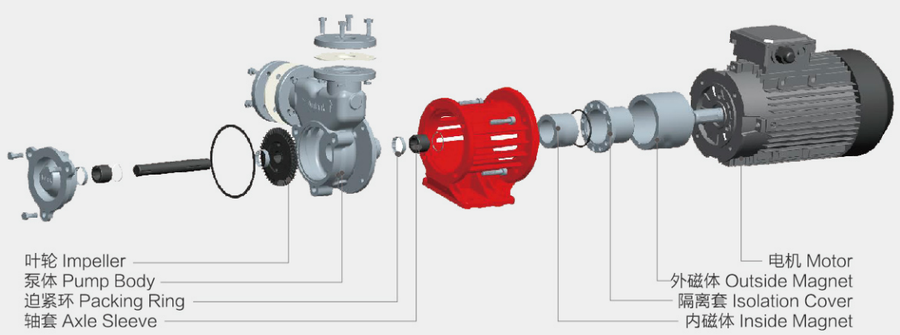

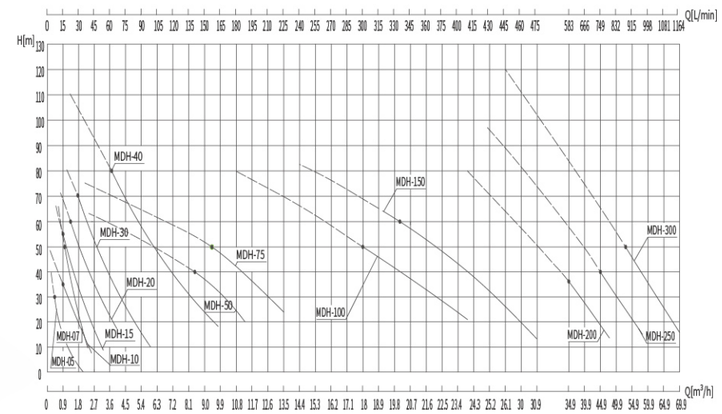

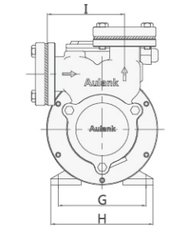

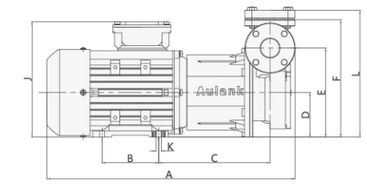

使用条件 / Working Condition

介质温度 Medium Temperature	介质比重 Medium Density	环境温度 Ambient Temperature	最高海拔 Maximum Elevation	最大工作压力 Maximum Working Pressure
-196°C～+400°C	0.6～2.0	-50°C～+70°C	5000m	30bar

规格性能参数 / Technical Parameter

型号/Model	口径/Diameter 进口 Inlet	口径/Diameter 出口 Outlet	电机/Motor 功率 Power (kW)	电机/Motor 匹数 (Hp)	电机/Motor 电压 Voltage (V)	电机/Motor 频率 Frequency (Hz)	电机/Motor 转速 Speed (r/min)	性能参数/Performance Parameter 最高/额定扬程 Max/Rated Head (m)	性能参数/Performance Parameter 最大流量 Max Capacity (m³/h)	泵浦自重 Pump Weight (kg)
MDH-05	DN20	DN15	0.37	0.5	3Ø-380	50	2760	50/30	2.1	11
MDH-07	DN20	DN15	0.5	0.7	3Ø-380	50	2760	80/50	2.7	12
MDH-10	DN25	DN20	0.75	1	3Ø-380	50	2760	55/35	3	16
MDH-15	DN25	DN20	1.1	1.5	3Ø-380	50	2760	80/55	3.9	18.5
MDH-20	DN40	DN32	1.5	2	3Ø-380	50	2760	90/60	5.4	26
MDH-30	DN40	DN32	2.2	3	3Ø-380	50	2760	100/70	7.2	29
MDH-40	DN40	DN32	3	4	3Ø-380	50	2900	120/80	9.6	37
MDH-50	DN50	DN40	4	5.5	3Ø-380	50	2900	62/40	11.7	67
MDH-75	DN50	DN40	5.5	7.5	3Ø-380	50	2900	65/50	13.5	69
MDH-100	DN65	DN50	7.5	10	3Ø-380	50	1470	80/50	24.9	193
MDH-150	DN65	DN50	11	15	3Ø-380	50	1470	100/60	32	229
MDH-200	DN80	DN65	15	20	3Ø-380	50	1470	80/38	44	332
MDH-250	DN80	DN65	18.5	25	3Ø-380	50	1470	100/40	60	352
MDH-300	DN80	DN65	22	30	3Ø-380	50	1470	120/50	69.8	361

*上述性能参数对应于水在20℃时以正常速度运输，性能及参数误差±10%。泵的性能随输送流体介质的比重及密度的不同而产生变化。
*The above characteristic testing is based on the water transferring with the normal speed under 20 degree. character'serror is about 10%. The pump characters change according to the difference of the liquid mediums' proportion and density.
*U代表黄铜叶轮。The letter "U" means brass impeller.

安装尺寸表 / Installation Size

型号/Model	A	B	C	D	E	F	G	H	I	J	K	L
MDH-05	340	80	143	63	128	170	100	120	86	169	4-Ø8	183
MDH-07	340	80	143	63	128	170	100	120	86	169	4-Ø8	183
MDH-10	384	90	177	71	142	187	112	132	98	183	4-Ø8	202
MDH-15	395	90	177	71	142	187	112	132	98	183	4-Ø8	202
MDH-20	450	100	190	80	161	213	125	153	112	205	4-Ø10	228
MDH-30	503	100	196	90	171	223	140	180	112	225	4-Ø10	238
MDH-40	570	70	80	100	185	244	100	130	125	235	4-Ø12	259
MDH-50	654	380	34.5	171	271.5	340	300	330	137	320	4-Ø14	352
MDH-75	654	380	34.5	171	271.5	340	300	330	137	320	4-Ø14	352
MDH-100	787.5	420	60.4	248	433.5	516.5	380	420	208	461	4-Ø18	534.5
MDH-150	825	545	60.4	248	433.5	516.5	440	480	208	508	4-Ø18	534.5
MDH-200	960	620	87	252	457	559	450	490	259	512	4-Ø18	583
MDH-250	1035	620	87	274	459	561	470	510	259	539	4-Ø18	585
MDH-300	1065	620	87	274	459	561	470	510	259	539	4-Ø18	585

* MDH-40 "B" "G" "K" 尺寸为支架安装孔尺寸， MDH-50 、MDH-75、MDH-100、MDH-150 "B" "C" "D" "E" "F" "G" "H" "J" "K" "L" 尺寸为底座安装孔尺寸

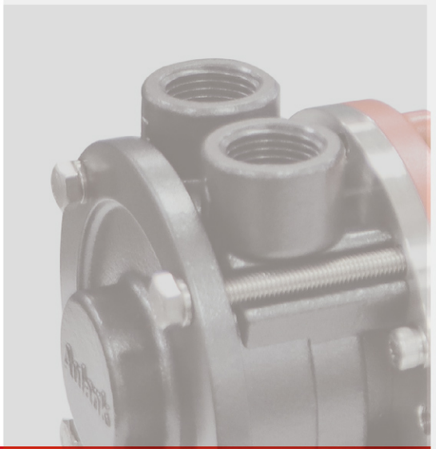

MDS

STAINLESS STEEL VORTEX MAGNETIC PUMP

不锈钢旋涡磁力泵

耐腐蚀 耐高温+400℃ 耐低温-196℃ 体积小 不锈钢316 低噪音 振动小 安全可靠

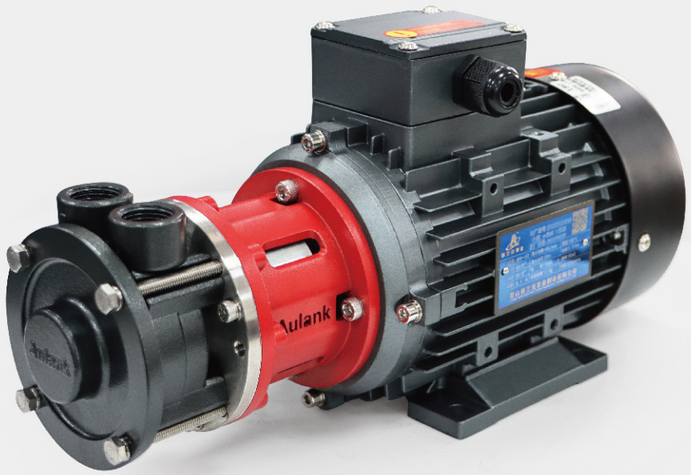

MDS-15

MDS磁力驱动高低温旋涡泵，过流部件材质为不锈钢，产品采用无轴封、磁力驱动设计，将动密封转换为静密封，实现泵浦在深冷和高温工况下的安全性和稳定性。

应用领域：半导体精密控温、光学镜片精密控温、高低温实验设备、微通道反应器、超声波清洗设备。

循环介质：不含颗粒、纤维的水、乙二醇、电子氟化液、碳气溶液、冰河冷媒等。

MDS magnetic drive high and low temperature vortex pump, the flow-passing parts is made of stainless steel, the product adopts the design of no shaft seal and magnetic drive, and the dynamic seal is converted into a static seal for the safety and stability of the pump under cryogenic and high temperature conditions .

Application areas: precise temperature control of semiconductors, precise temperature control of optical lenses, high and low temperature experimental equipment, micro-channel reactors, ultrasonic cleaning equipment.

Circulating medium: water without particles and fibers, ethylene glycol, electronic fluorinated liquid, carbon gas solution, glacial refrigerant, solvent etc.

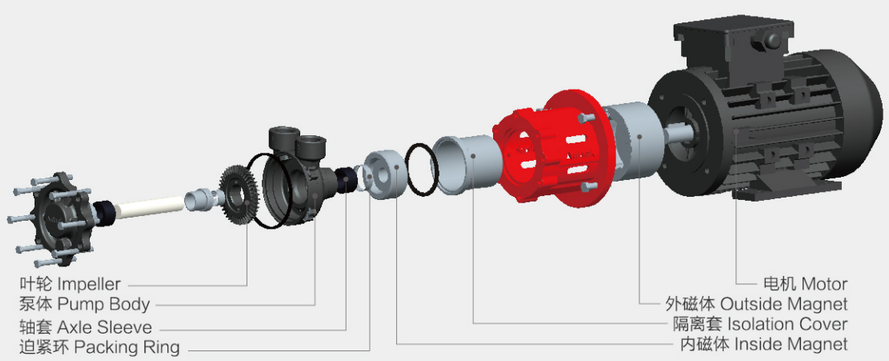

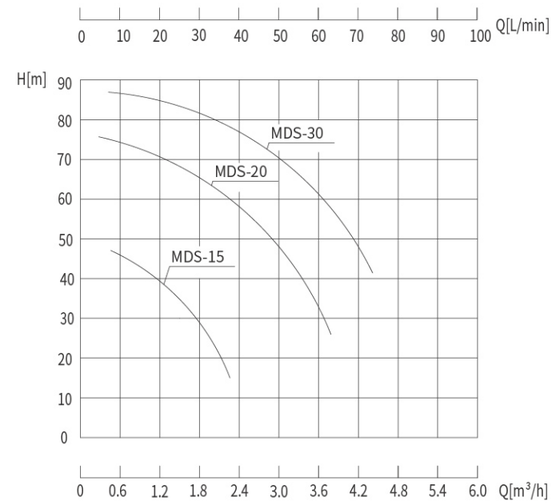

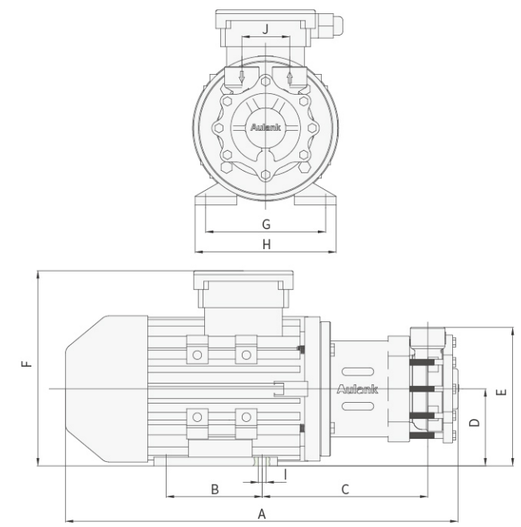

使用条件 / Working Condition

介质温度 Medium Temperature	介质比重 Medium Density	环境温度 Ambient Temperature	最高海拔 Maximum Elevation	最大工作压力 Maximum Working Pressure
-196°C～+400°C	0.6～2.0	-50°C～+70°C	5000m	30bar

规格性能参数 / Technical Parameter

型号/Model	口径/Diameter		电机/Motor					性能参数/Performance Parameter		泵浦自重 Pump Weight (kg)
	进口 Inlet	出口 Outlet	功率 Power (kW)	匹数 (Hp)	电压 Voltage (V)	频率 Frequency (Hz)	转速 Speed (r/min)	最高扬程 Max Head (m)	最大流量 Max Capacity (L/min)	
MDS-15	G1/2”	G1/2”	1.1	1.5	3Φ-380	50	2760	50	40	17
MDS-20	G3/4”	G3/4”	1.5	2	3Φ-380	50	2760	75	65	22
MDS-30	G3/4”	G3/4”	2.2	3	3Φ-380	50	2760	90	80	26

★上述性能参数对应于水在20℃时以正常速度运输，性能及参数误差±10%。泵的性能随输送流体介质的比重及密度的不同而产生变化。
The above characteristic testing is based on the water transferring with the normal speed under 20 degree. character'serror is about 10%. The pump characters change according to the difference of the liquid mediums' proportion and density.

安装尺寸表 / Installation Size

型号/Model	A	B	C	D	E	F	G	H	I	J
MDS-15	350	90	138	71	126	178	112	140	4-Ø8	35
MDS-20	409	100	172	80	144	203	125	147	4-Ø8	50
MDS-30	470	125	186	90	163	230	140	177	4-Ø10	55

MDK

STAINLESS STEEL VORTEX

MAGNETIC PUMP

不锈钢旋涡磁力泵

耐腐蚀 耐高温+400°C 耐低温-196°C 体积小 不锈钢316 低噪音 振动小 安全可靠

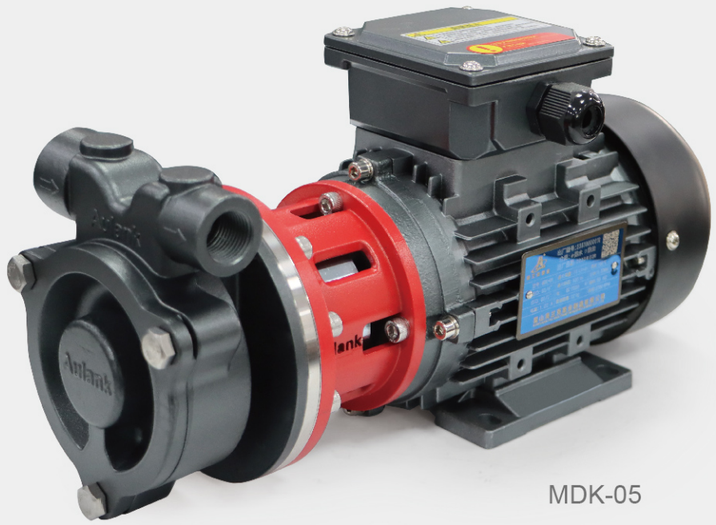

MDK-05

MDK磁力驱动高低温旋涡泵，过流部件材质为不锈钢，产品采用无轴封、磁力驱动设计，将动密封转换为静密封，实现泵浦在深冷和高温工况下的安全性和稳定性。

应用领域： 半导体精意控温、高低温实验设备、微通道反应器、超声波清洗设备、化工设备等。

循环介质： 不含颗粒、纤维的水、乙二醇、电子氮化液、碳氢溶液、冰河冷媒、溶剂等。

MDK magnetic drive high and low temperature vortex pump, flow-passing parts is made of stainless steel, the product adopts the design of no shaft seal and magnetic drive, and the dynamic seal is converted into a static seal for the safety and stability of the pump under cryogenic and high temperature conditions .

Application Area: Semiconductor precision temperature control, high and low temperature experimental equipment, micro-channel reactor, ultrasonic cleaning equipment, chemical equipment, etc.

Circulating medium: water without particles and fibers, ethylene glycol, electronic nitriding liquid, hydrocarbon solution, glacial refrigerant, solvent, etc.

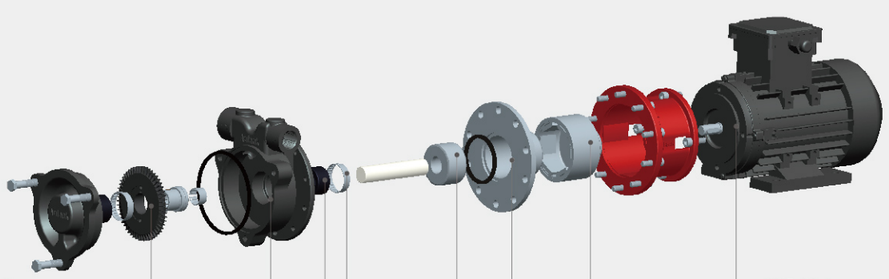

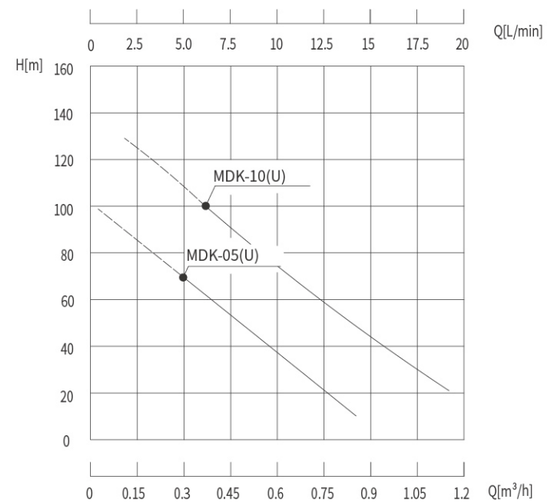

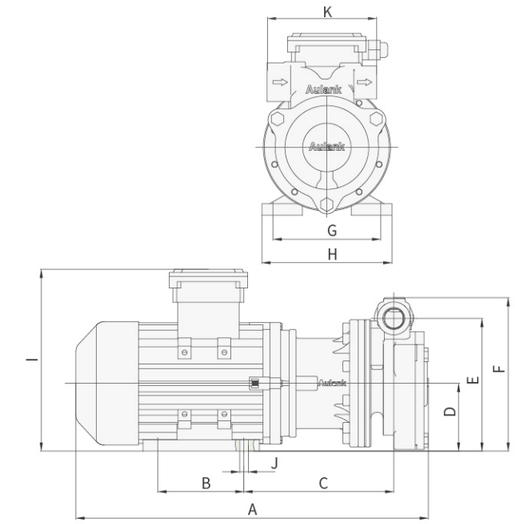

使用条件 / Working Condition

介质温度 Medium Temperature	介质比重 Medium Density	环境温度 Ambient Temperature	最高海拔 Maximum Elevation	最大工作压力 Maximum Working Pressure
-196°C～+400°C	0.6～2.0	-50°C～+70°C	5000m	20bar

规格性能参数 / Technical Parameter

型号/Model	口径/Diameter		电机/Motor					性能参数/Performance Parameter		泵浦自重 Pump Weight (kg)
	进口 Inlet	出口 Outlet	功率 Power (kW)	匹数 (Hp)	电压 Voltage (V)	频率 Frequency (Hz)	转速 Speed (r/min)	最高/额定扬程 Max/Rated Head (m)	最大流量 Max Capacity (L/min)	
MDK-05(U)	G3/4”	G1/2”	0.37	0.5	3Φ-380	50	2760	100/70	15	11
MDK-10(U)	G3/4”	G1/2”	0.75	1	3Φ-380	50	2760	130/100	20	12

★上述性能参数对应于水在20℃时以正常速度运输，性能及参数误差±10%。泵的性能随输送流体介质的比重及密度的不同而产生变化。
The above characteristic testing is based on the water transferring with the normal speed under 20 degree. character'serror is about 10%. The pump characters change according to the difference of the liquid mediums' proportion and density.
★U代表黄铜叶轮。The letter “U” means brass impeller.

安装尺寸表 / Installation Size

型号/Model	A	B	C	D	E	F	G	H	I	J	K
MDK-05(U)	327	80	139	63	123	143	100	121	169	4-Ø8	102
MDK-10(U)	350	90	143	71	131	151	112	136	178	4-Ø8	102

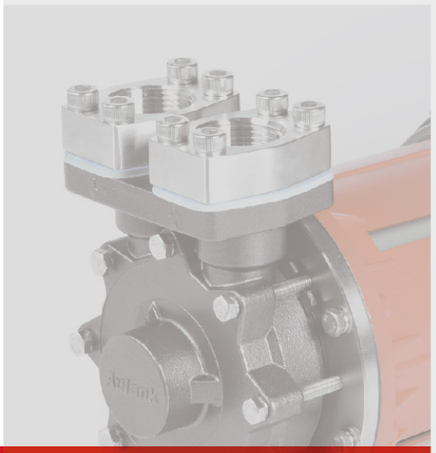

MDW

STAINLESS STEEL / COPPER VORTEX

MAGNETIC PUMP

不锈钢 / 黄铜旋涡磁力泵

耐腐蚀 耐高温+400°C 耐低温-196°C 体积小 不锈钢316 黄铜 铸铁 低噪音 振动小 安全可靠

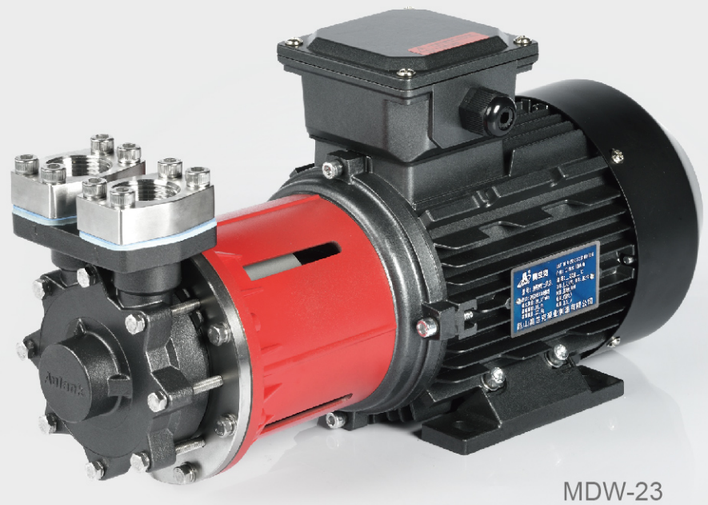

MDW-23

MDW系列磁力驱动式高低温旋涡泵，过流部件为不锈钢、黄铜、铸铁，产品采用先进的水力、高效的磁性传动结构、新颖的外观设计，通过精密的加工和制造工艺，实现磁力泵的节能、安全可靠、性能稳定、寿命久等优点，在中高端应用领域得到广泛应用。

应用领域：高温模具控温、高低温试验仪器、半导体精密控温、化工设备、模板控温、超声波清洗设备、高端印染设备、TCU控温系统等。

循环介质：不含颗粒、纤维的水、乙二醇、酒精、导热油、碳氢溶液、硅油、冰河冷媒、汽油、染料、化学溶液、液氮、电子氟化液等液体。

MDW series magnetic drive type high and low-temperature vortex pump, its flow parts are stainless steel, copper, castiron. MDW pump adopts advanced hydraulic power, efficient magnetic transmission structure, novel appearance design, through precise processing and manufacturing technology, it come true energy-saving, safe and reliable, stable performance, long life, and other advantages, MDW pumps are widely used in middle high-end fields.

Application Area: High temperature mold temperature controlling, High and low temperature test instrument, Semiconductor precision temperature control. Chemical equipment,Template temperature controlling ,Ultrasonic cleaning equipment, High end printing and dyeing equipment, TCU.

Circulation Medium: Water, ethylene glycol, alcohol, thermal oil, hydrocarbon solution, silicone oil, refrigerant gasoline, dyestuff, chemical solution, liquid nitrogen , Electronic Fluoride Solution and other liquids without particles and fibers.

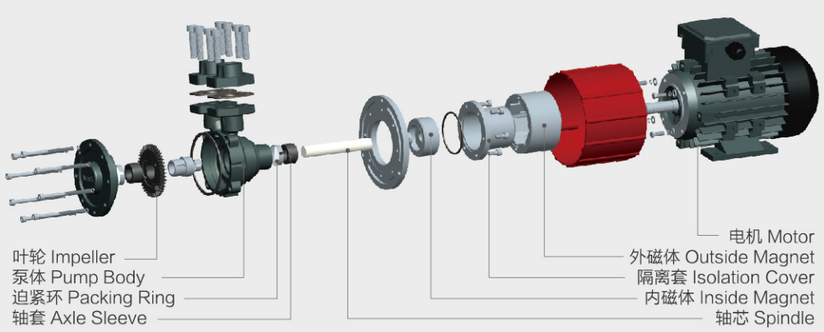

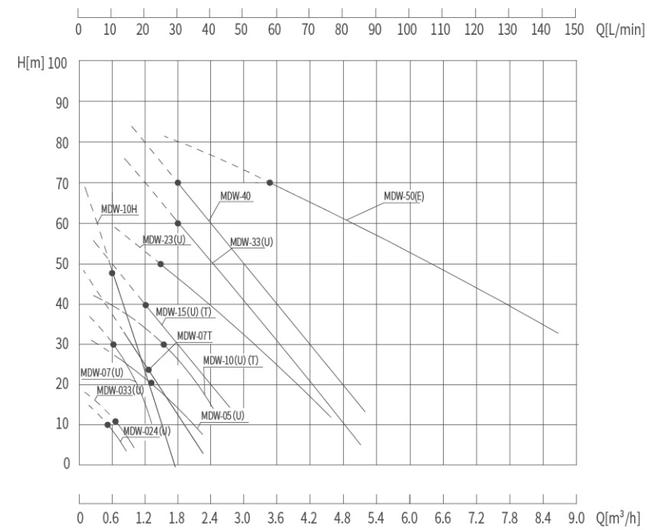

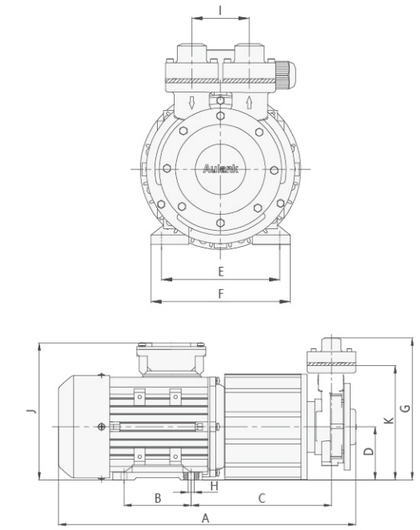

使用条件 / Working Condition

介质温度 Medium Temperature	介质比重 Medium Density	环境温度 Ambient Temperature	最高海拔 Maximum Elevation	最大工作压力 Maximum Working Pressure
-196°C～+400°C	0.6～2.0	-50°C～+70°C	5000m	60bar

规格性能参数 / Technical Parameter

型号/Model	口径/Diameter		电机/Motor					性能参数/Performance Parameter		泵浦自重 Pump Weight (kg)
	进口 Inlet	出口 Outlet	功率 Power (kW)	匹数 (Hp)	电压 Voltage (V)	频率 Frequency (Hz)	转速 Speed (r/min)	最高/额定扬程 Max/Rated Head (m)	最大流量 Max Capacity (L/min)	
MDW-024 (U)	DN15	DN15	0.18	0.24	3Ø-380	50	2760	15/10	15	7.5
MDW-033 (U)	DN15	DN15	0.25	0.33	3Ø-380	50	2760	20/12	15	9
MDW-05 (U)	DN15	DN15	0.37	0.5	3Ø-380	50	2760	30/20	30	9.5
MDW-07 (U)	DN15	DN15	0.5	0.7	3Ø-380	50	2760	40/30	25	10
MDW-07T	G1/2"	G1/2"	0.5	0.7	3Ø-380	50	2760	50/40	40	10
MDW-10H	DN15	DN15	0.75	1	3Ø-380	50	2760	75/50	30	10
MDW-10 (U) (T)	DN20	DN20	0.75	1	3Ø-380	50	2760	45/30	45	10
MDW-15 (U) (T)	DN20	DN20	1.1	1.5	3Ø-380	50	2760	60/40	60	17
MDW-23 (U) (T)	DN25	DN25	1.7	2.3	3Ø-380	50	2760	65/50	90	22
MDW-33 (U) (T)	DN25	DN25	2.5	3.3	3Ø-380	50	2760	90/60	90	26
MDW-40	DN25	DN25	3	4	3Ø-380	50	2900	100/70	100	35
MDW-50(E)	DN32	DN32	4	5	3Ø-380	50	2900	90/70	200	55

*上述性能参数对应于水在20℃时以正常速度运输，性能及参数误差±10%。泵的性能随输送流体介质的比重及密度的不同而产生变化。
*The above characteristic testing is based on the water transferring with the normal speed under 20 degrees. character'serror is about 10%. The pump characters change according to the difference of the liquid mediums' proportion and density.
*U 代表黄铜叶轮 T 代表螺纹接口 *E代表不锈钢泵体 *Brass impeller thread inlet /outlet E means stainless steel pump body

安装尺寸表 / Installation Size

型号/Model	A	B	C	D	E	F	G	H	I	J	K
MDW-024 (U)	297	71	130	56	90	112	153	4-Ø8	35	137	117
MDW-033 (U)	313	80	135	63	100	125	160	4-Ø8	35	169	124
MDW-05 (U)	323	80	135	63	100	125	160	4-Ø8	35	169	124
MDW-07 (U)	362	90	154	71	112	132	169	4-Ø8	35	183	133
MDW-07T	377	90	178	71	112	132	190	4-Ø8	55	183	153
MDW-10H	388	90	178	71	112	132	190	4-Ø8	55	183	153
MDW-10 (U) (T)	436	100	193	80	125	153	195	4-Ø10	55	205	161
MDW-15 (U) (T)	436	100	193	80	125	153	195	4-Ø10	55	205	161
MDW-23 (U) (T)	490	100	198	90	140	180	205	4-Ø10	55	225	171
MDW-33 (U) (T)	490	100	198	90	140	180	205	4-Ø10	55	225	171
MDW-40	556	70	80	100	100	130	240	4-Ø12	60	235	200
MDW-50(E)	647	140	287	100	160	200	243	4-Ø12	60	248	200

注：MDW-40 "B" "C" "E"尺寸为支架安装孔尺寸

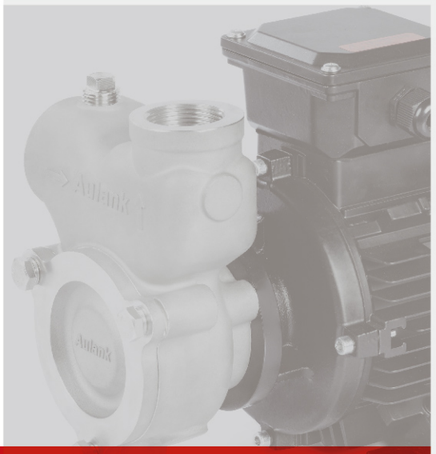

WH
STAINLESS STEEL VORTEX PUMP
不锈钢旋涡泵

高压力 耐高温 耐低温 耐腐蚀 体积小 不锈钢 低噪音 振动小 安全可靠 气液混合

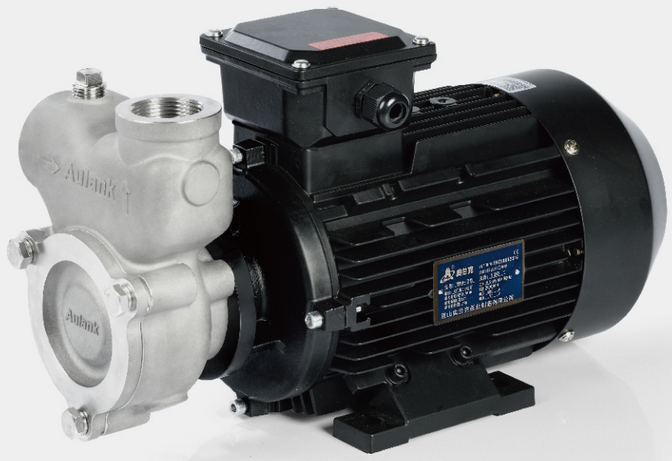

WH-75

应用领域： 模具控温、锅炉补水、超声波清洗、食品机械、臭氧发生器、高低温检测等。

循环介质： 不含颗粒、纤维的水、乙二醇、酒精、导热油、碳氢溶液、硅油、食用油等。

Application Area: Mold temperature controlling unite, Boiler feed water, Ultrasonic cleaning, Food machine，Ozone generator, High&low temperature detection.

Circulation Medium: Circulation Medium: Water , Ethylene glycol, Alcohol, Heat transfer oil, hydrocarbon solution, silicone oil, cooking oil and other liquids without particles and fibers.

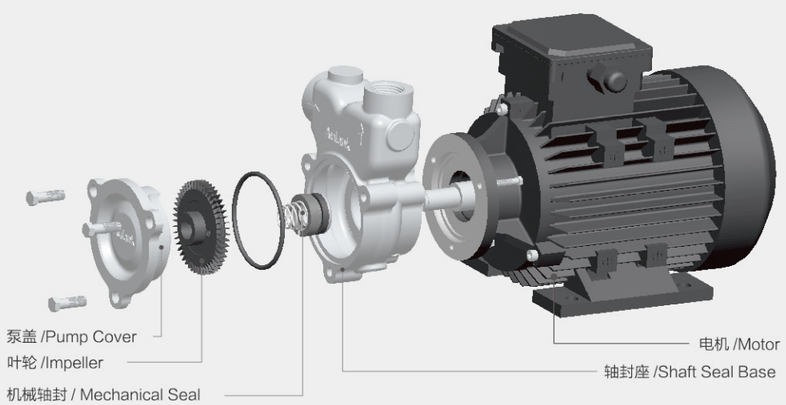

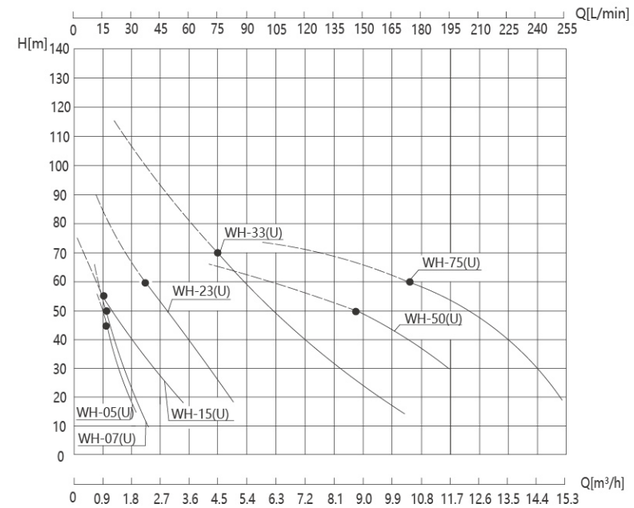

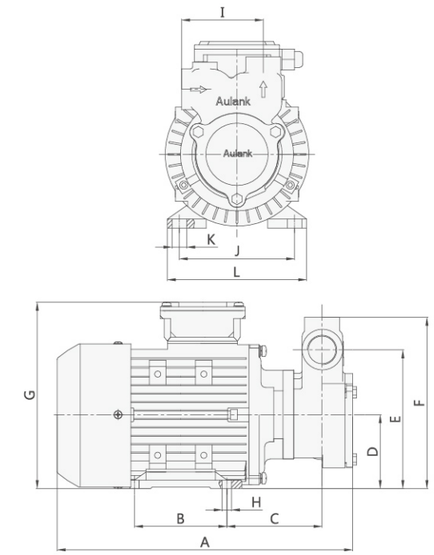

使用条件 / Working Condition

高温热水 Thermal Conductivity Water	高温导热油 Thermal Conductivity Oil	乙二醇/硅油 Glycol/Silicone Oil	工作环境温度 Working Temperature	最高海拔 Maximum Elevation	最大工作压力 Maximum Working Pressure
+5°C~+160°C	+5°C~+200°C	-30°C~+180°C	-5°C~+40°C	1000m	10bar

规格性能参数 / Technical Parameter

型号/Model	口径/Diameter		电机/Motor					性能参数/Performance Parameter		泵浦自重 Pump Weight (kg)
	进口 Inlet	出口 Outlet	功率 Power (kW)	匹数 (Hp)	电压 Voltage (V)	频率 Frequency (Hz)	转速 Speed (r/min)	最高/额定扬程 Max/Rated Head (m)	最大流量 Max Capacity (L/min)	
WH-05 (U)	G3/4”	G1/2”	0.37	0.5	3Ø-380	50	2760	60/45	40	8
WH-07 (U)	G3/4”	G1/2”	0.55	0.7	3Ø-380	50	2760	80/50	45	8
WH-15 (U)	G1”	G3/4”	1.1	1.5	3Ø-380	50	2760	80/55	65	15.5
WH-23 (U)	G1-1/4”	G1”	1.7	2.3	3Ø-380	50	2760	100/60	120	20
WH-33 (U)	G1-1/2”	G1-1/4”	2.5	3.3	3Ø-380	50	2760	120/70	160	25.5
WH-50 (U)	G2”	G1-1/2”	4	5	3Ø-380	50	2760	70/50	220	40
WH-75 (U)	G2”	G1-1/2”	5.5	7.5	3Ø-380	50	2760	80/60	250	42

*上述性能参数对应于水在20℃时以正常速度运输，性能及参数误差±10%。泵的性能随输送流体介质的比重及密度的不同而产生变化。

*The above characteristic testing is based on the water transferring with the normal speed under 20 degrees. character'serror is about 10%. The pump characters change according to the difference of the liquid mediums” proportion and density.

U代表黄铜叶轮。 The letter “U” means brass impeller.

安装尺寸表 / Installation Size

型号/Model	A	B	C	D	E	F	G	H	I	J	K	L
WH-07 (U)	298	90	105	71	136	167	185	4-Ø8	76	112	12	132
WH-15 (U)	320	100	103	80	150	185	202	4-Ø10	88	125	16	153
WH-23 (U)	408	100	118	90	171	210	225	4-Ø10	99.5	140	16	180
WH-33 (U)	415	100	120	90	175	221	225	4-Ø10	115	140	16	180
WH-50 (U)	525	140	150	100	200	257	250	4-Ø12	125	160	16	200
WH-75 (U)	525	140	150	100	200	257	250	4-Ø12	125	160	16	200

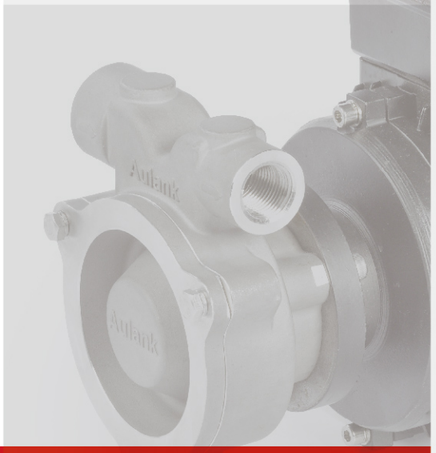

WK

HIGH LIFT VORTEX PUMP

高扬程旋涡泵

高压力 耐高温 耐低温 耐腐蚀 体积小 不锈钢 低噪音 振动小 安全可靠

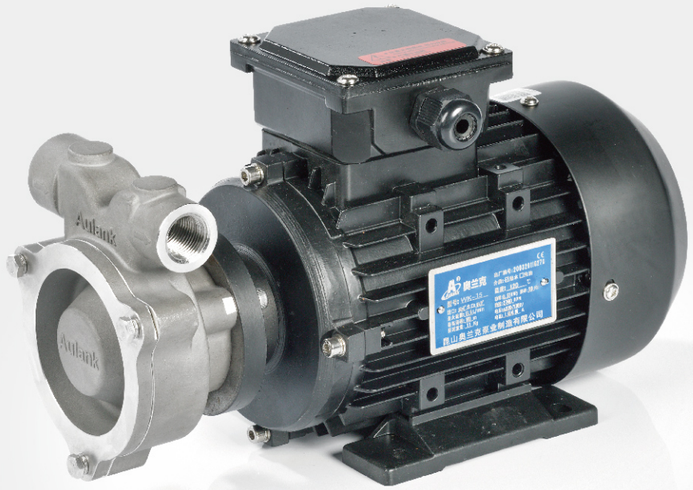

WK-15

应用领域：模具控温、蒸汽发生器、锅炉补水、高压补水等。

循环介质：不含颗粒、纤维的水、乙二醇、酒精、导热油、碳氢溶液、硅油等。

Application Area: Mold temperature controlling unite, Steam generato, Boilerwater supply, High pressure water supplyequipmentand otherindustries.

Circulation Medium: Circulation Medium: Water, Ethylene glycol, Alcohol, Heat transfer oil, hydrocarbon solution, silicone oil, and other liquids without particles and fibers.

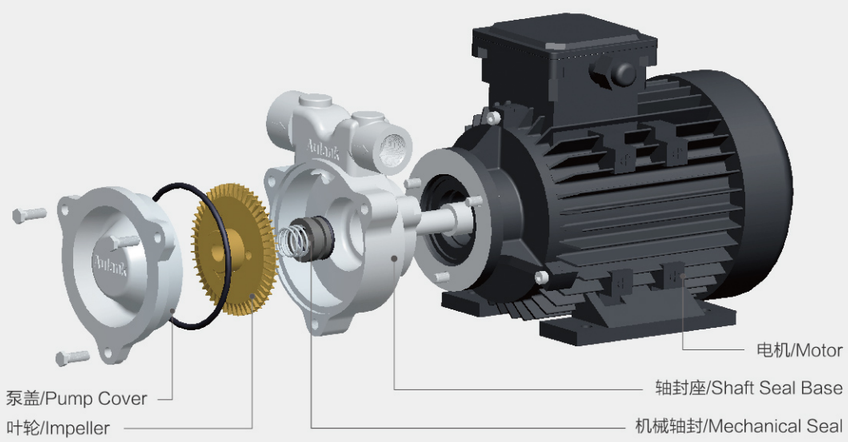

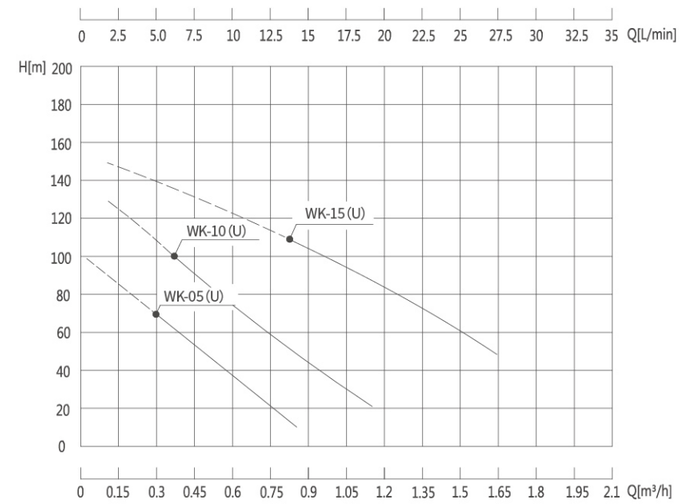

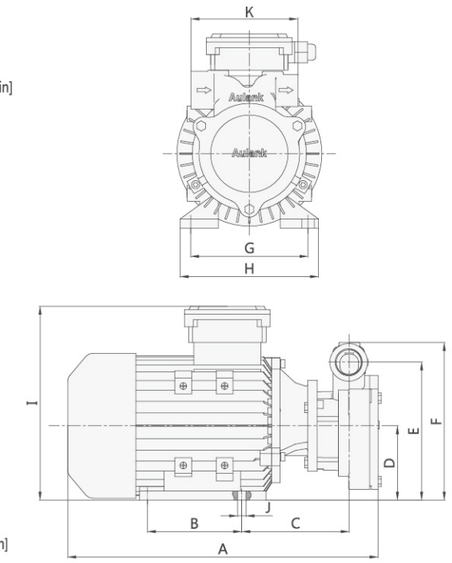

使用条件 / Working Condition

高温热水 Thermal Conductivity Water	高温导热油 Thermal Conductivity Oil	乙二醇/硅油 Glycol/Silicone Oil	工作环境温度 Working Temperature	最高海拔 Maximum Elevation	最大工作压力 Maximum Working Pressure
+5℃~+160℃	+5℃~+200℃	-30℃~+180℃	-5℃~+40℃	1000m	15bar

规格性能参数 / Technical Parameter

型号/Model	口径/Diameter		电机/Motor					性能参数/Performance Parameter		泵浦自重 Pump Weight (kg)
	进口 Inlet	出口 Outlet	功率 Power (kW)	匹数 (Hp)	电压 Voltage (V)	频率 Frequency (Hz)	转速 Speed (r/min)	最高/额定扬程 Max/Rated Head (m)	最大流量 Max Capacity (L/min)	
WK-05 (U)	G3/4”	G1/2”	0.37	0.5	3Ø-380	50	2760	100/70	15	11
WK-10 (U)	G3/4”	G1/2”	0.75	1	3Ø-380	50	2760	130/100	20	12
WK-15 (U)	G3/4”	G1/2”	1.1	1.5	3Ø-380	50	2760	150/110	35	15

*上述性能参数对应于水在20℃时以正常速度运输，性能及参数误差±10%。泵的性能随输送流体介质的比重及密度的不同而产生变化。*The above characteristic testing is based on the water transferring with the normal speed under 20 degrees. character'serror is about 10%. The pump characters change according to the difference of the liquid mediums' proportion and density.

*U代表黄铜叶轮。*The letter “U” means brass impeller.

安装尺寸表 / Installation Size

型号/Model	A	B	C	D	E	F	G	H	I	J	K
WK-05 (U)	296	90	103	71	132	151	112	132	185	4-Ø8	102
WK-10 (U)	296	90	103	71	132	151	112	132	185	4-Ø8	102
WK-15 (U)	332	100	109	80	165	195	125	153	202	4-Ø10	113

VP
HIGH PRESSURE VANE PUMP
高压叶片泵

耐腐蚀 | 铜 | 不锈钢 | 体积小 | 低噪音 | 振动小 | 安全可靠 | 节能

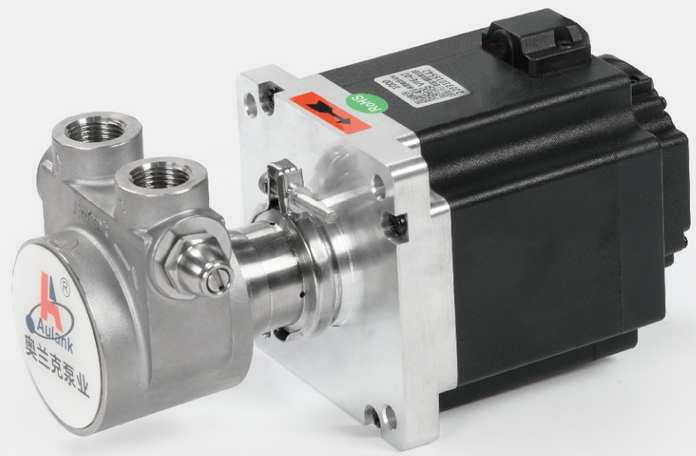

VPE-07EM-1000

VP系列叶片泵主要由增压室、叶片、转子、泵体、电机等部件组成，可根据使用需求，选配不锈钢、黄铜作为泵体材质；单相、三相、防爆、变频、直流作为驱动电机；产品具有可自吸、高扬程、小流量、结构精密、体积小、噪音低、外观精致等特点。

应用领域：激光设备冷却、等离子切割机、X射线和医用激光冷却系统、实验室设备冷却循环、高压清洗设备、反渗透系统、咖啡机、现调机、园林雾化等。

循环介质：不含颗粒、纤维的水、乙二醇、甲醇、酒精等。

The vane pump is composed of a plenum chamber,vane, rotor, pump body and other spare parts . The material of the pump body is stainless steel or brass; The motor can be made of single phase, three phase, explosion proof or frequency conversion, DC; The advantages of the pump are self-priming , high pressure with small capacity, small volume, low noisy and fine appearance .

Application Area: Laser equipment cooling Plasma cutting machines X-ray and medical laser cooling systems laboratory equipment cooling system High pressure cleaning equipment Reverse osmosis systems, etc, Coffe machine , Beverage dispenser machine , Garden spray equipment .

Circulation Medium: Water, ethylene glycol, methanol, alcohol and other liquids without particles and fibers.

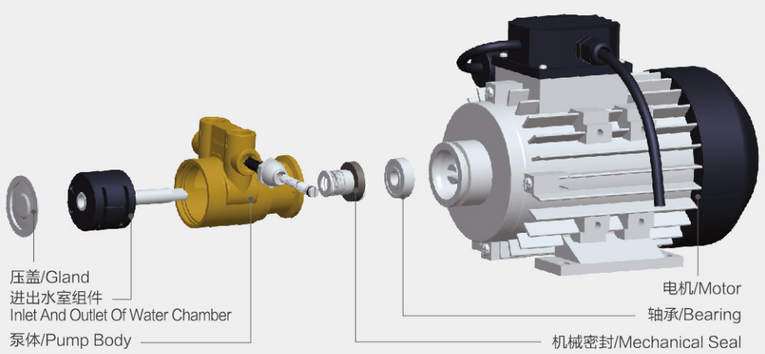

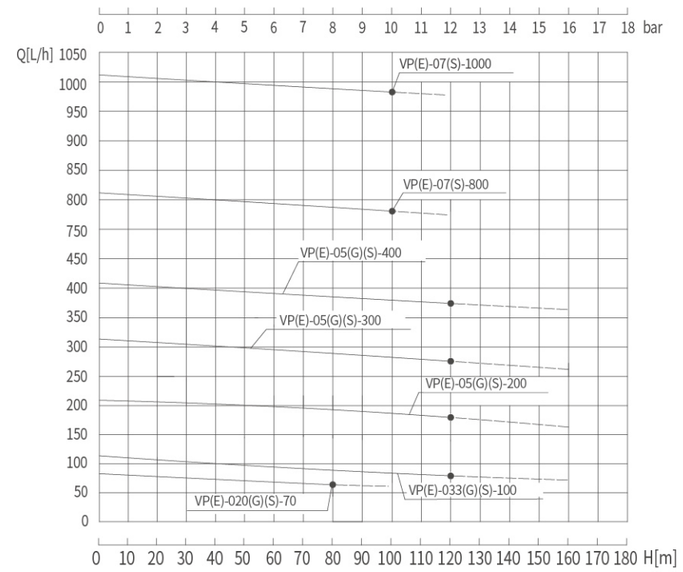

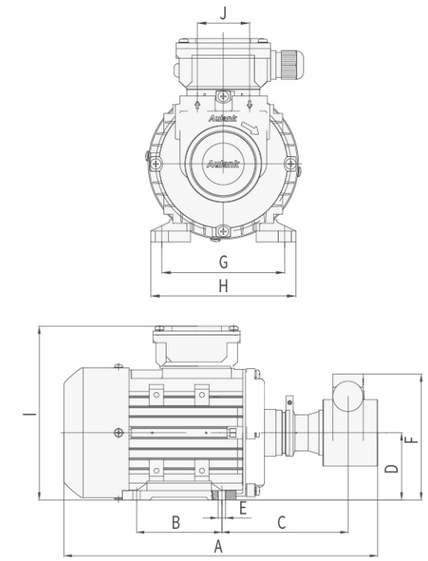

使用条件 / Working Condition

高温热水 Thermal Conductivity Water	乙二醇 Ethylene Glycol	工作环境温度 Working Temperature	最高海拔 Maximum Elevation	最大工作压力 Maximum Working Pressure
+5℃~+90℃	-20℃~+90℃	-5℃~+40℃	1000m	16bar

规格性能参数 / Technical Parameter

型号/Model	口径/Diameter 进口 Inlet	口径/Diameter 出口 Outlet	电机/Motor 功率 Power (kW)	电机/Motor 匹数 (Hp)	电机/Motor 电压 Voltage (V)	电机/Motor 频率 Frequency (Hz)	电机/Motor 转速 Speed (r/min)	性能参数/Performance Parameter 最高/额定扬程 Max /Rated Head (m)	性能参数/Performance Parameter 最大流量 Max Capacity (L/h)	泵浦自重 Pump Weight (kg)
VP(E)-020(G)(S)-70	G3/8"	G3/8"	0.15	0.2	3Ø-380 1Ø-220	50	1450	100/80	70	5
VP(E)-033(G)(S)-100	G3/8"	G3/8"	0.25	0.33		50	1450	160/120	100	8
VP(E)-05(G)(S)-200	G3/8"	G3/8"	0.37	0.5		50	1450	160/120	200	9.5
VP(E)-05(G)(S)-300	G3/8"	G3/8"	0.37	0.5		50	1450	160/120	300	9.5
VP(E)-05(G)(S)-400	G3/8"	G3/8"	0.37	0.5		50	1450	160/120	400	9.5
VP(E)-07(S)-800	G1/2"	G1/2"	0.55	0.7		50	1450	120/100	800	10.5
VP(E)-07(S)-1000	G1/2"	G1/2"	0.55	0.7		50	1450	120/100	1000	10.5

*上述性能参数对应于水在20℃时以正常速度运输，性能及参数误差±10%。泵的性能随输送流体介质的比重及密度的不同而产生变化。
The above characteristic testing is based on the water transferring with the normal speed under 20 degrees. character'serror is about 10%. The pump characters change according to the difference of the liquid mediums' proportion and density.

*E代表不锈钢泵体;G代表含有过滤器的泵体;S代表单相电源;EM代表永磁同步电机。*The letter "E" means stainless steel pump body; "G" means pump body with filter; "S" means single phase; "EM" means permanent magnet synchronous motor.

*所有规格均可选配直流电机/同步永磁电机。*All specifications can be equipped with DC motor / synchronous permanent magnet motor.

安装尺寸表 / Installation Size

型号/Model	A	B	C	D	E	F	G	H	I	J
VP(E)-020(G)(S)-70	274	71	109	56	4-Ø7	106.5/116.5	90	110	136	38
VP(E)-033(G)(S)-100	308	80	123	63	4-Ø8	113.5/123.5	100	120	169	38
VP(E)-05(G)(S)-200	334	90	128	71	4-Ø8	121.5/131.5	112	132	185	38
VP(E)-05(G)(S)-300	334	90	128	71	4-Ø8	121.5/131.5	112	132	185	38
VP(E)-05(G)(S)-400	334	90	128	71	4-Ø8	121.5/131.5	112	132	185	38
VP(E)-07(S)-800	332	90	133	71	4-Ø8	133	112	132	185	48
VP(E)-07(S)-1000	332	90	133	71	4-Ø8	133	112	132	185	48

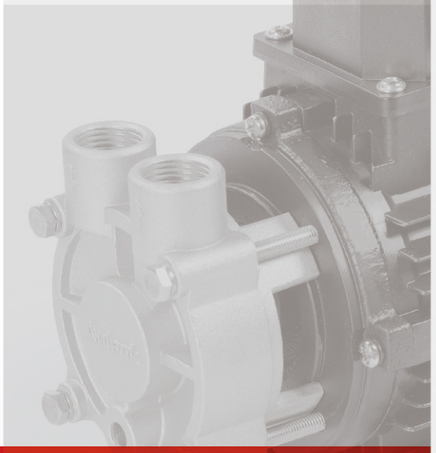

WD

COPPER / STAINLESS STEEL

VORTEX PUMP

黄铜/不锈钢旋涡泵

耐高温 耐低温 体积小 铜 不锈钢 低噪音 振动小 性能稳定

WD-07E

应用领域： 模具控温、医药灭菌、反应釜夹套控温、蒸汽锅炉、焊机冷却、试验仪器、锅炉补水、热水炉、食品设备等。

循环介质： 不含颗粒、纤维的水、乙二醇、酒精、导热油、碳氢溶液、硅油等液体。

Application Area: Mold temperature controlling, Medical sterilization,Reaction kettle,Steam generator,Welder cooling ,Testing instrument,Boiler feed water,Hot water furnace,Food equipment.

Circulation Medium: Water,ethylene glycol,alcohol,thermal oil,hydrocarbon solution,silicone oil and other liquids without particles and fibers.

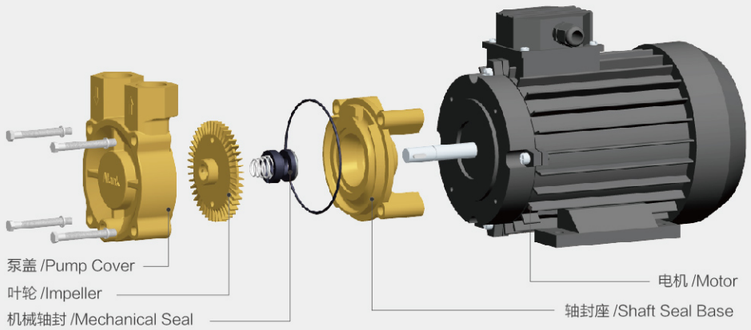

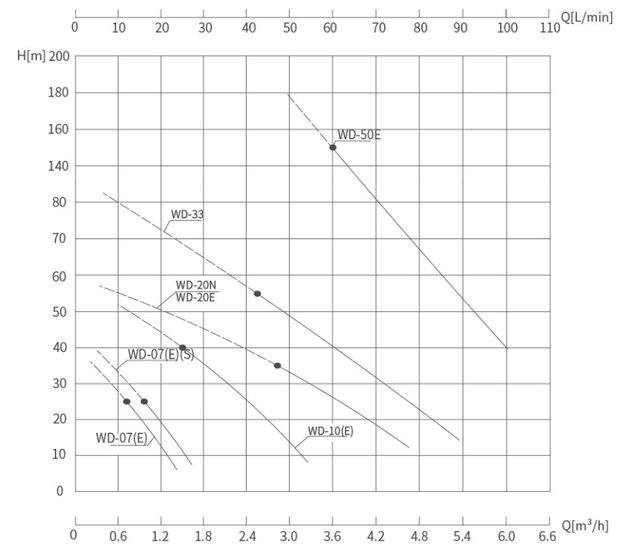

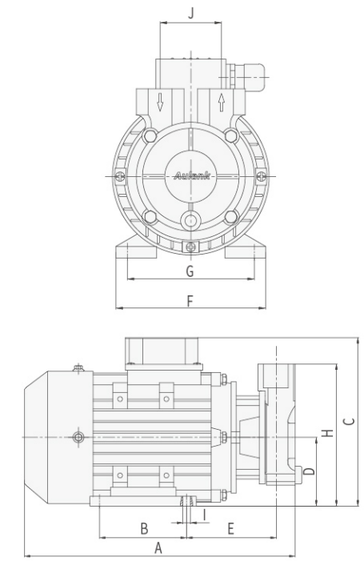

使用条件 / Working Condition

高温热水 Thermal Conductivity Water	高温导热油 Thermal Conductivity Oil	乙二醇/硅油 Glycol/Silicone Oil	工作环境温度 Working Temperature	最高海拔 Maximum Elevation	最大工作压力 Maximum Working Pressure
+5℃~+160℃	+5℃~+200℃	-30℃~+180℃	-5℃~+40℃	1000m	20bar

规格性能参数 / Technical Parameter

型号/Model	口径/Diameter		电机/Motor					性能参数/Performance Parameter		泵浦自重 Pump Weight (kg)
	进口 Inlet	出口 Outlet	功率 Power (kW)	匹数 (Hp)	电压 Voltage (V)	频率 Frequency (Hz)	转速 Speed (r/min)	最高/额定扬程 Max/Rated Head (m)	最大流量 Max Capacity (L/min)	
WD-07(E)	G1/2"	G1/2"	0.55	0.7	3Ø-380	50	2760	40/25	25	6.5
WD-07 (E) (S)	G1/2"	G1/2"	0.55	0.7	1Ø-220	50	2760	45/25	30	6.5
WD-10	G3/4"	G3/4"	0.75	1	3Ø-380	50	2760	60/40	60	11
WD-10E	DN20	DN20	0.75	1	3Ø-380	50	2760	60/40	60	11
WD-20N	DN20	DN20	1.5	2	3Ø-380	50	2760	60/35	90	16
WD-20E	G3/4"	G3/4"	1.5	2	3Ø-380	50	2760	60/35	90	15
WD-33	DN25	DN25	2.5	3.3	3Ø-380	50	2760	85/55	108	26
WD-50E	G1-1/4"	G1-1/4"	4	5	3Φ-380	50	2760	200/150	106	40

*上述性能参数对应于水在20℃时以正常速度运输，性能及参数误差±10%。泵的性能随输送流体介质的比重及密度的不同而产生变化。
The above characteristic testing is based on the water transferring with the normal speed under 20 degrees. character'serror is about 10%. The pump characters change according to the difference of the liquid mediums' proportion and density.

*E代表不锈钢泵体;S代表单相电源。The letter "E" means stainless steel pump body; "S" means single phase.

安装尺寸表 / Installation Size

型号/Model	A	B	C	D	E	F	G	H	I	J
WD-07 (E)	237	80	160	63	75	125	100	119	4-Ø8	35
WD-07 (E) (S)	265	90	175	71	83	132	112	127	4-Ø8	35
WD-10	285	90	175	71	92	132	112	147	4-Ø8	55
WD-10E	292.5	90	175	71	90	132	112	148	4-Ø8	55
WD-20N	314.5	100	193	80	92.5	153	125	202	4-Ø10	55
WD-20E	400	125	210	90	138	170	140	223	4-Ø10	60
WD-33	400	125	210	90	138	170	140	223	4-Ø10	60
WD-50E	432	140	280	112	120	220	190	227	4-Ø12	95

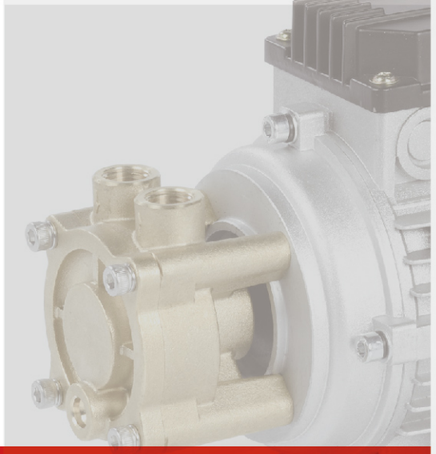

WD-W

COPPER / STAINLESS STEEL

VORTEX PUMP

黄铜/不锈钢旋涡泵

耐高温 耐低温 体积小 铜 不锈钢 低噪音 振动小 性能稳定

WD-021W

应用领域：医疗灭菌器，蒸汽发生器，高低温试验仪器，焊机冷却，小型冷却循环系统等。

循环介质：不含颗粒、纤维的水、乙二醇、酒精、导热油、碳氢溶液、硅油等液体。

Application Area： Medical sterilization，Steam generator，High-low temperature testing instrument，Welder cooling,Small cooling and circulating system.

Circulation Medium： Water，ethylene glycol , alcohol，thermal oil，hydrocarbon solution，silicone oil and other liquids without particles and fibers.

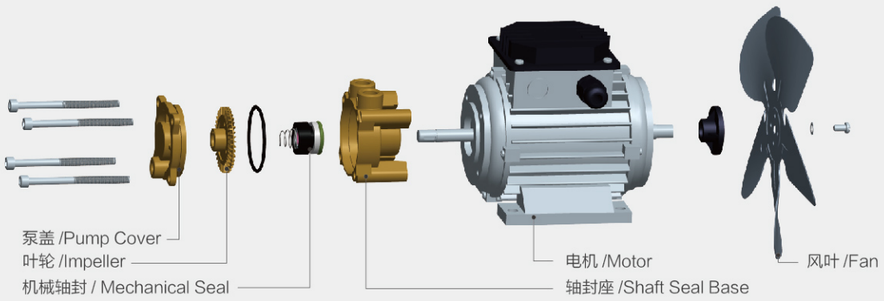

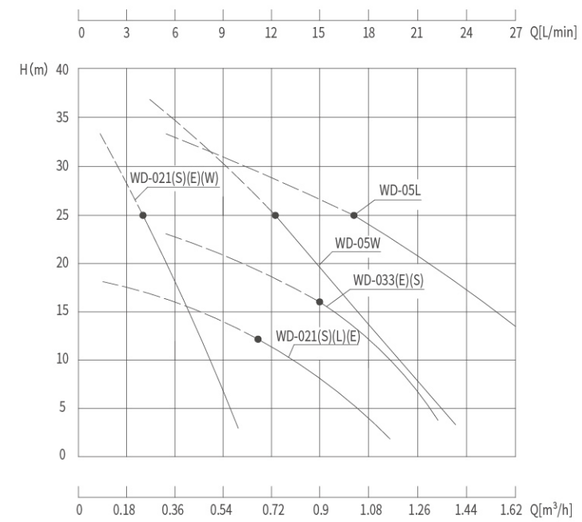

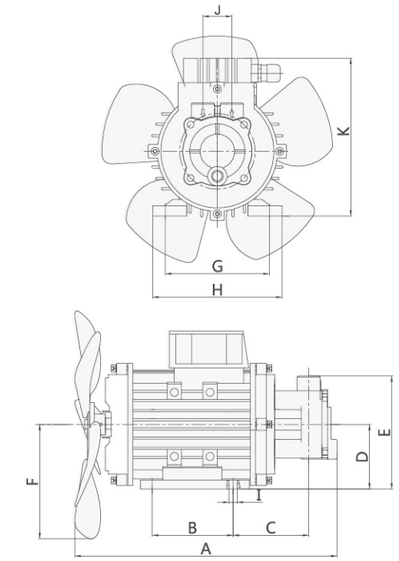

使用条件 / Working Condition

高温热水 Thermal Conductivity Water	高温导热油 Thermal Conductivity Oil	乙二醇 Ethylene glycol	工作环境温度 Working Temperature	最高海拔 Maximum Elevation	最大工作压力 Maximum Working Pressure
+5°C~+160°C	+5°C~+200°C	-30°C~+180°C	-5°C~+40°C	1000m	10bar

规格性能参数 / Technical Parameter

型号/Model	口径/Diameter		电机/Motor					性能参数/Performance Parameter		泵浦自重 Pump Weight (kg)
	进口 Inlet	出口 Outlet	功率 Power (kW)	匹数 (Hp)	电压 Voltage (V)	频率 Frequency (Hz)	转速 Speed (r/min)	最高/额定扬程 Max/Rated Head (m)	最大流量 Max. Capacity (L/min)	
WD-021 (S) (E) (W)	G1/4"	G1/4"	0.16	0.21	3Ø-380 1Ø-220 1Ø-380	50	2760	36/25	10	4
WD-021 (S) (L) (E)	G1/2"	G1/2"	0.16	0.21	3Ø-380 1Ø-220	50	2760	20/12	20	5
WD-033 (E) (S)	G1/2"	G1/2"	0.25	0.33	3Ø-380 1Ø-220	50	2760	25/16	22	6
WD-05W	G1/2"	G1/2"	0.37	0.5	1Ø-220 1Ø-380	50	2760	45/25	25	6.5
WD-05L	G1/2"	G1/2"	0.37	0.5	3Ø-380	50	2760	45/25	25	6.5

*上述性能参数对应于水在20°C时以正常速度运输，性能及参数误差±10%。泵的性能随输送流体介质的比重及密度的不同而产生变化。
*The above characteristic testing is based on the water transferring with the normal speed under 20 degrees. character'serror is about 10%. The pump characters change according to the difference of the liquid mediums' proportion and density.

*E代表不锈钢泵体;S代表单相电源；L代表大流量；W焊机冷却。*The letter "E" means stainless steel pump body; "S" means single phase; "L" means large flow; "W" welder cooling.

安装尺寸表 / Installation Size

型号/Model	A	B	C	D	E	F	G	H	I	J	K
WD-021 (S) (E) (W)	227	70	65.5	56	98	-/100	90	112	4-Ø8	25	137
WD-021 (S) (L) (E)	226	70	74	56	112	-	90	112	4-Ø8	35	137
WD-033 (E) (S)	240	80	75	63	119	-	100	125	4-Ø8	35	175
WD-05W	240	80	75	63	119	100	100	125	4-Ø8	35	175
WD-05L	237	80	75	63	119	-	100	125	4-Ø8	35	160

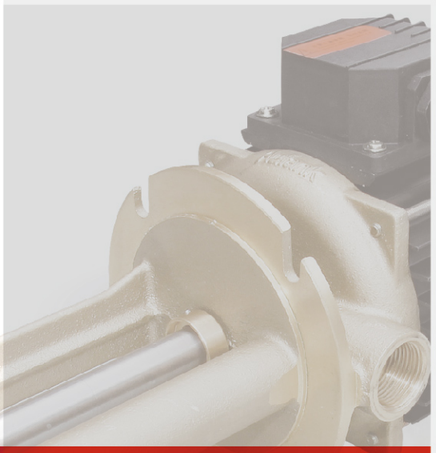

WL
VERTICAL VORTEX PUMP
立式旋涡泵

无泄漏 耐高温 耐低温 体积小 铜 不锈钢 低噪音 振动小 性能稳定

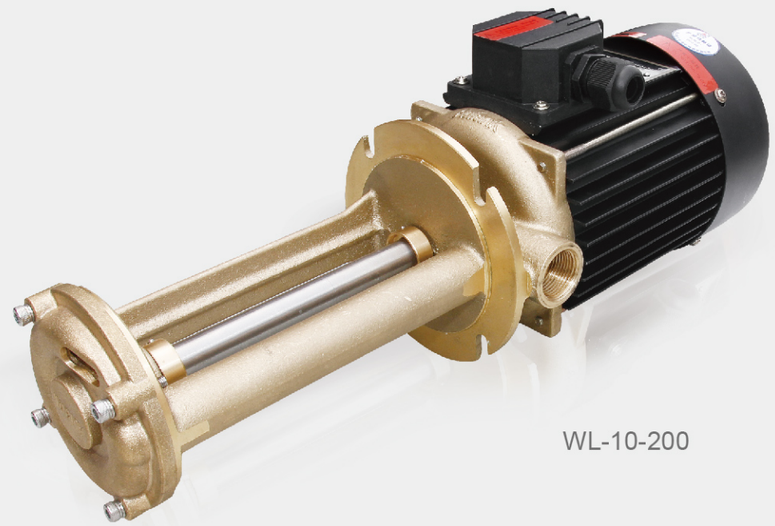

WL-10-200

应用领域：模具控温、料筒保温、机床冷却等。

循环介质：不含颗粒、纤维的水、乙二醇、导热油、机床冷却液等液体。

Application Area：Mold temperature controlling , Cylinder heat preservation, Machine tool cooling.

Circulation Medium：Water, ethylene glycol,themal oil machine tool cooling liquid and other liquids without particles and fibers.

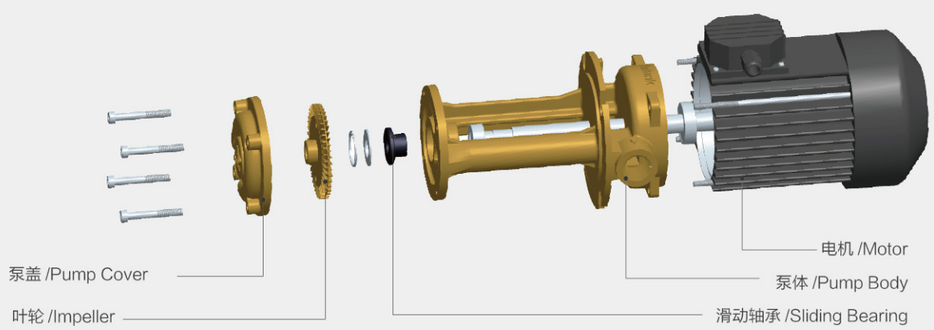

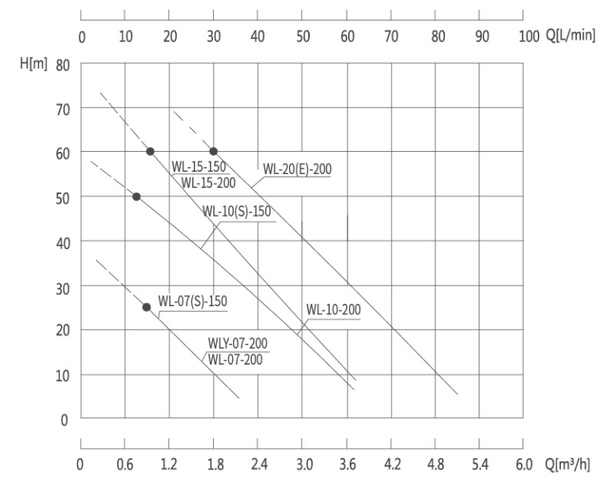

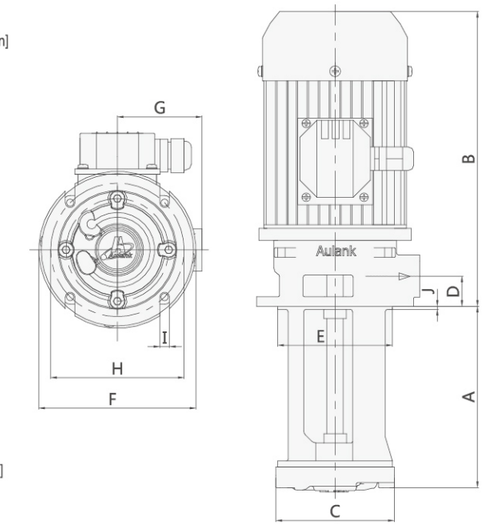

使用条件 / Working Condition

高温热水 Thermal Conductivity Water	高温导热油 Thermal Conductivity Oil	乙二醇 Ethylene glycol	工作环境温度 Working Temperature	最高海拔 Maximum Elevation	最大工作压力 Maximum Working Pressure
+5℃~+95℃	+5℃~+200℃	-30℃~+180℃	-5℃~+40℃	1000m	10bar

规格性能参数 / Technical Parameter

型号/Model	口径/Diameter	电机/Motor					性能参数/Performance Parameter		泵浦自重 Pump Weight (kg)
	出口 Outlet	功率 Power (kW)	匹数 (Hp)	电压 Voltage (V)	频率 Frequency (Hz)	转速 Speed (r/min)	最高/额定扬程 Max/Rated Head (m)	最大流量 Max Capacity (L/min)	
WL-07 (S) -150	G3/4"	0.5	0.7	3Ø-380 1Ø-220	50	2760	38/25	38	9
WL-07-200	G3/4"	0.5	0.7	3Ø-380	50	2760	38/25	38	10
WLY-07-200	G1/2"								11
WL-10 (S) -150	G3/4"	0.75	1	3Ø-380 1Ø-220	50	2760	60/50	70	11.5
WL-10-200	G3/4"	0.75	1	3Ø-380	50	2760	60/50	70	12
WL-15-150	G3/4"	1.1	1.5	3Ø-380	50	2760	80/60	70	13
WL-15-200	G3/4"	1.1	1.5	3Ø-380	50	2760	80/60	70	13
WL-20E-200	G1"	1.5	2	3Ø-380	50	2760	75/60	90	15

*上述性能参数对应于水在20℃时以正常速度运输，性能及参数误差±10%。泵的性能随输送流体介质的比重及密度的不同而产生变化。
*The above characteristic testing is based on the water transferring with the normal speed under 20 degrees. character'serror is about 10%. The pump characters change according to the difference of the liquid mediums' proportion and density.

*E代表不锈钢泵体;S代表单相电源。*The letter "E" means stainless steel pump body; "S" means single phase.

安装尺寸表 / Installation Size

型号/Model	A	B	C	D	E	F	G	H	I	J
WL-07 (S) -150	150	236	Ø98	25	Ø95	Ø130	70	Ø112	10	3
WL-07-200	200	236	Ø98	25	Ø95	Ø130	70	Ø112	10	3
WLY-07-200	200	236	Ø98	25	Ø130	Ø160	70	Ø145	7	3
WL-10 (S) -150	150	240	Ø100	25	Ø95	Ø130	70	Ø112	8	2.5
WL-10-200	200	240	Ø100	25	Ø95	Ø130	70	Ø112	8	2.5
WL-15-150	150	250	Ø100	25	Ø95	Ø130	70	Ø112	8	2.5
WL-15-200	200	250	Ø100	25	Ø95	Ø130	70	Ø112	8	2.5
WL-20E-200	200	278	Ø115	25	Ø104	Ø140	74	Ø120	10	2.5

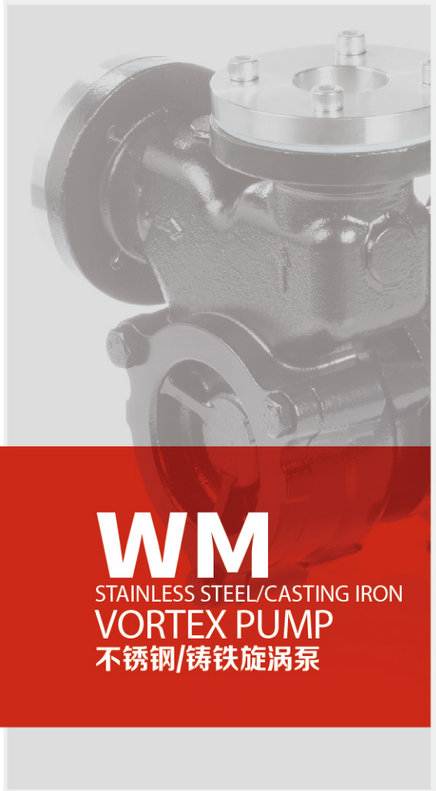

WM

STAINLESS STEEL/CASTING IRON VORTEX PUMP

不锈钢/铸铁旋涡泵

耐高温 耐低温 体积小 铸铁 不锈钢 低噪音 振动小 性能稳定

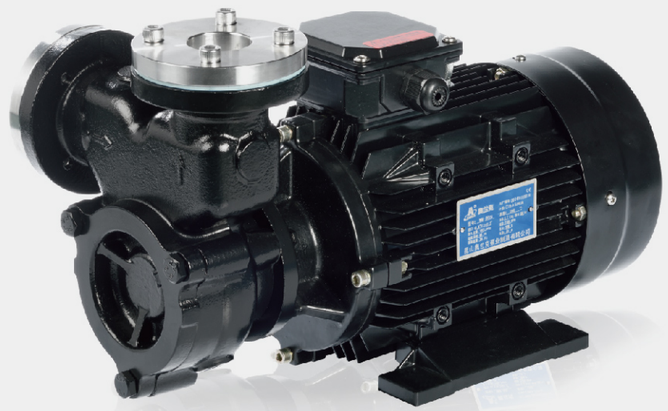

WM-30N

应用领域：模具控温、超声波清洗、试验仪器、机床冷却、料筒控温、冷热交换系统等。

循环介质：不含颗粒、纤维的水、乙二醇、酒精、导热油、碳氢溶液、硅油等液体。

Application Area: Mold temperature controlling,Ultrasonic cleaning,Testing instrument,Machine tool cooling,Cylinder heat preservation, Hot and cold switching system.

Circulation Medium: Water，ethylene glycol , alcohol，thermal oil，hydrocarbon solution，silicone oil and other liquids without particles and fibers.

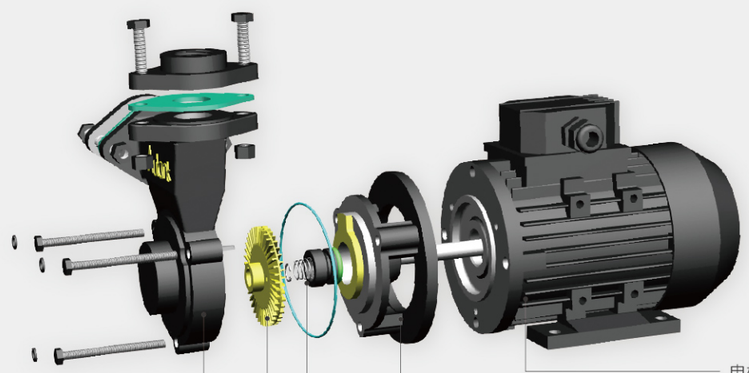

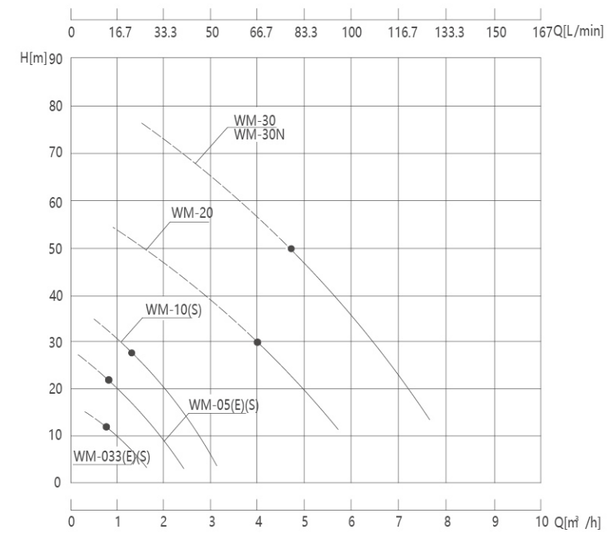

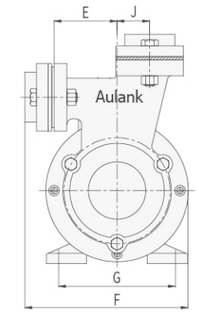

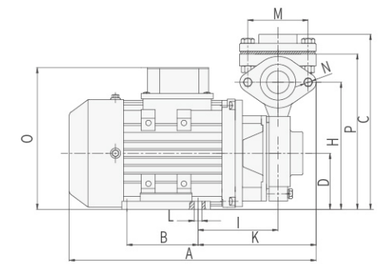

使用条件 / Working Condition

高温热水 Thermal Conductivity Water	高温导热油 Thermal Conductivity Oil	乙二醇 Ethylene glycol	工作环境温度 Working Temperature	最高海拔 Maximum Elevation	最大工作压力 Maximum Working Pressure
+5°C~+160°C	+5°C~+200°C	-30°C~+180°C	-5°C~+40°C	1000m	10bar

规格性能参数 / Technical Parameter

型号/Model	口径/Diameter		电机/Motor					性能参数/Performance Parameter		泵浦自重 Pump Weight (kg)
	进口 Inlet	出口 Outlet	功率 Power	匹数 (Hp)	电压 Voltage (V)	频率 Frequency (Hz)	转速 Speed (r/min)	最高/额定扬程 Max/Rated Head (m)	最大流量 Max Capacity (L/min)	
WM-033(E)(S)	DN20	DN20	0.25	0.33	3Ø-380 1Ø-220	50	2760	15 / 12	30	9
WM-05(E)(S)	DN20	DN20	0.37	0.5	3Ø-380 1Ø-220	50	2760	28 / 22	42	9
WM-10(S)	DN20	DN20	0.75	1	3Ø-380 1Ø-220	50	2760	38 / 28	56	12.5
WM-20	DN25	DN25	1.5	2	3Ø-380	50	2760	55 / 30	110	18
WM-30	G1-1/2"	G1-1/4"	2.2	3	3Ø-380	50	2760	85 / 50	140	24
WM-30N	DN40	DN32	2.2	3	3Ø-380	50	2760	85 / 50	140	24

*上述性能参数对应于水在20℃时以正常速度运输，性能及参数误差±10%。泵的性能随输送流体介质的比重及密度的不同而产生变化。
*The above characteristic testing is based on the water transferring with the normal speed under 20 degrees. character'serror is about 10%. The pump characters change according to the difference of the liquid mediums' proportion and density.

*N代表新款。"N" stands for new model .

*E代表不锈钢泵体；*The letter "E" means stainless steel pump body.

安装尺寸表 / Installation Size

型号/Model	A	B	C	D	E	F	G	H	I	J	K	L	M	N	O	P
WM-033(E)(S)	275	80	197	63	54	144	100	142.5	85	29	128	4-Ø8	68	2-Ø9	160	175
WM-05(E)(S)	275	80	197	63	54	144	100	142.5	85	29	128	4-Ø8	68	2-Ø9	160	175
WM-10(S)	305	90	197	71	66	159	112	127	96	-	139	4-Ø8	68	2-Ø9	175	175
WM-20(S)	350	100	216.5	80	72	172	125	150	120	-	166	4-Ø10	73	2-Ø9	193	192.5
WM-30	400	125	220	90	70	-	140	175	132	40	-	4-Ø10	-	-	210	220
WM-30N	413	125	252.5	90	95	208	140	175	132	40	184.5	4-Ø10	78	4-Ø10	210	232

AGD

HIGH-LOW TEMPERATURE VERTICAL PIPELINE PUMP

高低温立式管道泵

耐高温 耐低温 大流量 铸铁 低噪音 振动小 性能稳定

AGD-75

AGD系列高低温立式管道循环泵，为单级单吸离心泵，设计采用直连式的设计结构，性能优秀的水力模型，过流部件精密铸造成型，摩擦损失小，泵效率高。该系列产品具有高效节能、噪音低、振动低，耐高低温、性能可靠等优点。

应用领域：温控设备、供热系统、暖通、空调系统、工业液体输送、供水系统。

循环介质：产品适用于输送稀薄、干净、非侵蚀、非易燃易爆，且不含固体颗粒、纤维或者物理化学性质类似于水的液体。

AGD series high-low temperature vertical pipeline circulating pump is a single-stage single-suction centrifugal pump, designed with a direct-connected design structure, a hydraulic model with excellent performance, and precision casting of over-current components, with low friction loss and high pump efficiency. This series of pumps has the advantages of high efficiency and energy saving, low noise, low vibration, high-low temperature resistance, and reliable performance.nd reliability, stable performance, save installation space and long life, etc., MDZ pumps are widely used in middle high-end fields.

Application Area: Temperature control equipment, heating system, HVAC, air conditioning system, industrial liquid conveying, water supply system.ntrolling, High end cleaning equipment, High end printing and dyeing equipment, TCU, High temperature condensate recycle.

Circulation Medium: This pump is suitable for conveying thin, clean, non-erosive, non-flammable and explosive liquids that do not contain solid particles, fibers or physical and chemical properties similar to water.

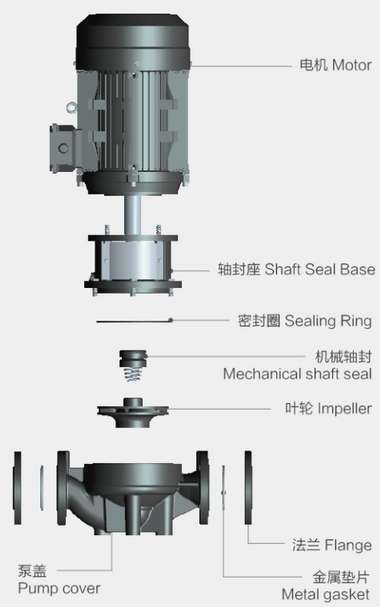

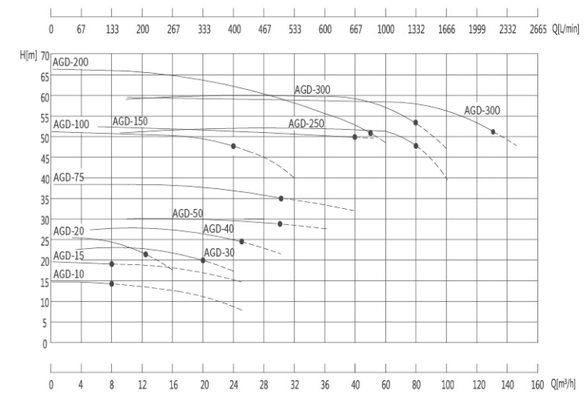

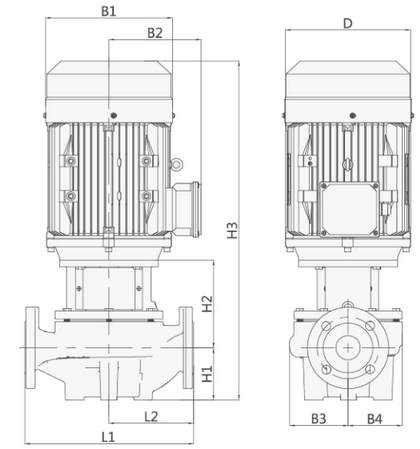

使用条件 / Working Condition

高温热水 Thermal Conductivity Water	高温导热油 Thermal Conductivity Oil	乙二醇 Ethylene glycol	工作环境温度 Working Temperature	最高海拔 Maximum Elevation	最大工作压力 Maximum Working Pressure
+5°C~+160°C	+5°C~+200°C	-30°C~+180°C	-5°C~+40°C	1000m	10bar

规格性能参数 / Technical Parameter

型号/Model	口径/Diameter		电机/Motor					性能参数/Performance Parameter		泵浦自重 Pump Weight (kg)
	进口 Inlet	出口 Outlet	功率 Power (kW)	匹数 (Hp)	电压 Voltage (V)	频率 Frequency (Hz)	转速 Speed (r/min)	额定扬程 Rated Head (m)	额定流量 Rated Capacity (m^3/h)	
AGD-10	DN32	DN32	0.75	1	3ø-380	50	2900	14	8	33
AGD-15	DN32	DN32	1.1	1.5	3ø-380	50	2900	18	8	34
AGD-20	DN32	DN32	1.5	2	3ø-380	50	2900	21	12.5	38
AGD-30	DN40	DN40	2.2	3	3ø-380	50	2900	20	20	42
AGD-40	DN50	DN50	3	4	3ø-380	50	2900	24	25	55
AGD-50	DN40	DN40	4	5	3ø-380	50	2900	30	28	65
AGD-75	DN50	DN50	5.5	7.5	3ø-380	50	2900	35	30	81
AGD-100	DN40	DN40	7.5	10	3ø-380	50	2900	48	25	95
AGD-150	DN50	DN50	11	15	3ø-380	50	2900	50	40	185
AGD-200	DN65	DN65	15	20	3ø-380	50	2900	51	50	195
AGD-250	DN80	DN80	18.5	25	3ø-380	50	2900	47	80	203
AGD-300	DN80	DN80	22	30	3ø-380	50	2900	54	80	256
AGD-400	DN100	DN100	30	40	3ø-380	50	2900	52	130	336

*上述性能参数对应于水在20℃时以正常速度运输，性能及参数误差±10%。泵的性能随输送流体介质的比重及密度的不同而产生变化。
*The above characteristic testing is based on the water transferring with the normal speed under 20 degrees. character'serror is about 10%. The pump characters change according to the difference of the liquid mediums' proportion and density.

安装尺寸表 / Installation Size

型号/Model	L1	L2	H1	H2	H3	B1	B2	D	B3	B4
AGD-10	320	160	90	135	455	150	115	150	100	100
AGD-15	320	160	90	135	455	150	115	150	100	100
AGD-20	320	160	90	137	492	171	137	173	100	100
AGD-30	320	160	85	145	516	171	137	140	105	95
AGD-40	340	170	105	147	590	196	150	160	115	100
AGD-50	340	170	105	152	600	215	170	160	118	110
AGD-75	340	170	105	177	686	257	187	253	118	110
AGD-100	380	190	90	181	675	257	187	253	133	128
AGD-150	400	200	105	225	830	315	260	350	171	163
AGD-200	440	220	115	225	830	325	388	350	171	163
AGD-250	450	225	115	240	900	315	260	350	160	138
AGD-300	450	225	115	240	932	355	273	350	160	138
AGD-400	550	275	140	257	1050	397	315	400	180	152

RGP

LARGE FLOW
CENTRIFUGAL PUMP
大流量离心泵

耐高温 耐低温 体积小 铸铁 不锈钢 低噪音 振动小 性能稳定

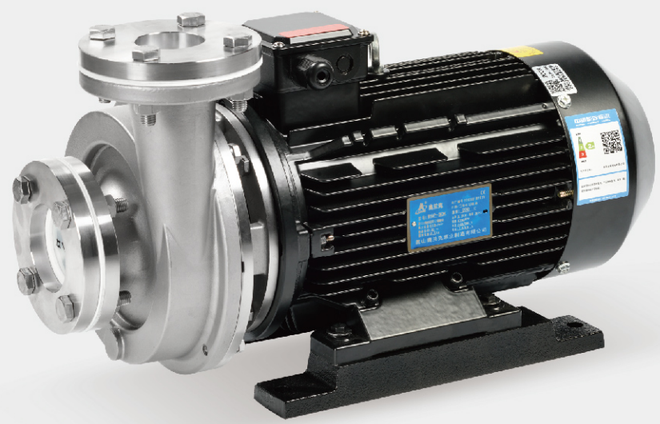

RGP-30K

应用领域：模具控温、辊轮控温、反应釜夹套控温、冷凝水回收、食品设备、清洗设备、模板控温、料筒控温、冷热交换系统等。

循环介质：不含颗粒、纤维的水、乙二醇、酒精、导热油、碳氢溶液、硅油、食用油等液体。

Application Area: Mold temperature controlling,Roller temperature controlling, Reaction kettle, Condensate water recovery ,Food processing equipment,Washing equipment,Template temperature controlling,Cylinder heat preservation,Hot and cold switching system etc.

Circulation Medium: Water，ethylene glycol, alcohol，thermal oil，hydrocarbon solution，silicone oil，edible oil and other liquids without particles and fibers.

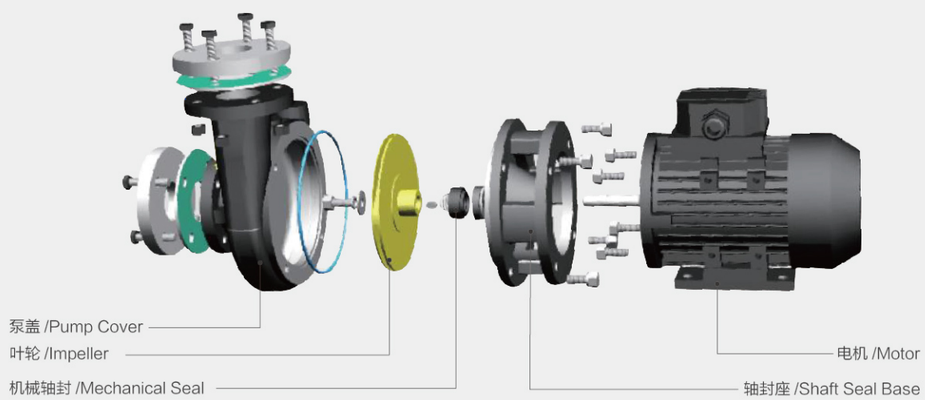

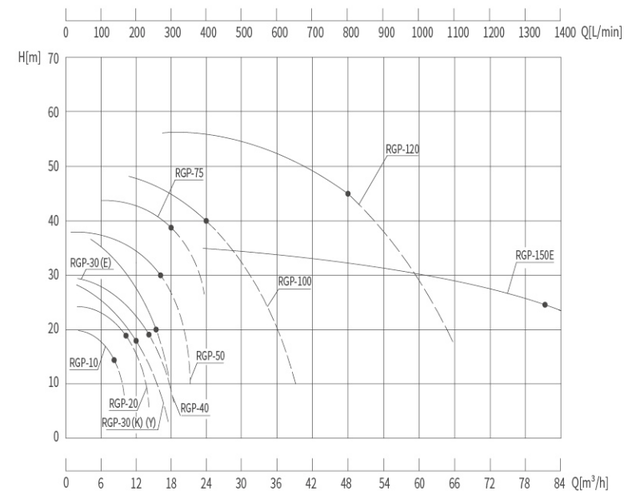

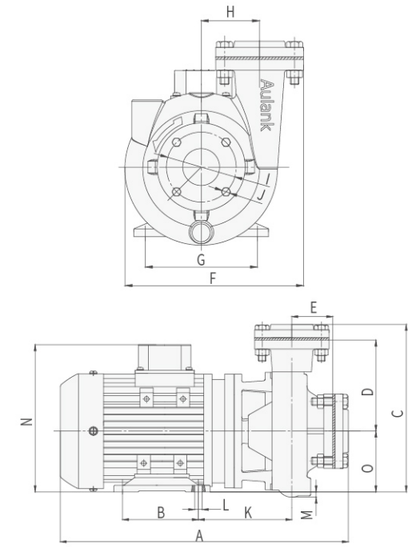

使用条件 / Working Condition

高温热水 Thermal Conductivity Water	高温导热油 Thermal Conductivity Oil	乙二醇 Ethylene glycol	工作环境温度 Working Temperature	最高海拔 Maximum Elevation	最大工作压力 Maximum Working Pressure
+5°C~+160°C	+5°C~+200°C	-30°C~+180°C	-5°C~+40°C	1000m	10bar

规格性能参数 / Technical Parameter

型号/Model	口径/Diameter		电机/Motor					性能参数/Performance Parameter		泵浦自重 Pump Weight (kg)
	进口 Inlet	出口 Outlet	功率 Power (kW)	匹数 (Hp)	电压 Voltage (V)	频率 Frequency (Hz)	转速 Speed (r/min)	最高扬程 Max Head (m)	最大/使用流量 Max/Use Capacity (L/min)	
RGP-10	DN40	DN40	0.75	1	3Ø-380	50	2760	18	165/133	18
RGP-20	DN50	DN40	1.5	2	3Ø-380	50	2760	22	235/167	25
RGP-30(E)	DN50	DN40	2.2	3	3Ø-380	50	2760	28	315/233	32
RGP-30(K) (Y)	DN50	DN32	2.2	3	3Ø-380	50	2760	28	300/200	28
RGP-40	DN50	DN32	3	4	3Ø-380	50	2900	35	300/255	37
RGP-50	DN50	DN40	4	5	3Ø-380	50	2900	38	367/267	60
RGP-75	DN50	DN40	5.5	7.5	3Ø-380	50	2900	42	400/300	65
RGP-100	DN65	DN50	7.5	10	3Ø-380	50	2900	50	680/400	86
RGP-120	DN65	DN50	9	12	3Ø-380	50	2900	55	1200/800	88
RGP-150E	DN100	DN100	11	15	3Ø-380	50	2900	32	1800/1300	89

*上述性能参数对应于水在20℃时以正常速度运输，性能及参数误差±10%。泵的性能随输送流体介质的比重及密度的不同而产生变化。
*The above characteristic testing is based on the water transferring with the normal speed under 20 degrees. character'serror is about 10%. The pump characters change according to the difference of the liquid mediums' proportion and density.

*E代表不锈钢泵体；K代表开式叶轮、不锈钢泵体。
*The letter "E" means stainless steel pump body; "K" means open impeller、 stainless steel pump body.

安装尺寸表 / Installation Size

型号/Model	A	B	C	D	E	F	G	H	I	J	K	L	M	N	O
RGP-10	379	100	220.5	120	54	199	125	65	Ø78	4-Ø10	123	4-Ø10	7	194	80
RGP-20	414.5	100	238.5	129	59	222	140	75	Ø94	4-Ø12	136	4-Ø10	5	210	90
RGP-30(E)	436	125	256.5	132	61	233.5	140	80	Ø94	4-Ø12	130	4-Ø10	11	210	90
RGP-30(K)(Y)	419	125	250	137	48	232	140	70	Ø94	4-Ø12	124	4-Ø10	13	210	90
RGP-40	498	140	274.5	135	65	267.5	160	95	Ø94	4-Ø12	147	4-Ø12	17.5	275	100
RGP-50	551	140	330	195	100	312	190	110	Ø120	4-Ø15	163	4-Ø12	18	281	112
RGP-75	595	140	350	195	110	332	215	100	Ø120	4-Ø15	181	4-Ø14	-	320	132
RGP-100/120	626	140	326	178	105	373.5	215	138	Ø142	4-Ø18	209	4-Ø14	43	320	132
RGP-150E	658	140	330	170	78	350	215	112	Ø180	4-Ø18	213	4-Ø12	3	335	132

RGZ

CASTING IRON / STAINLESS STEEL

CENTRIFUGAL PUMP

铸铁 / 不锈钢离心泵

耐高温 耐低温 体积小 铸铁 不锈钢 低噪音 振动小 性能稳定

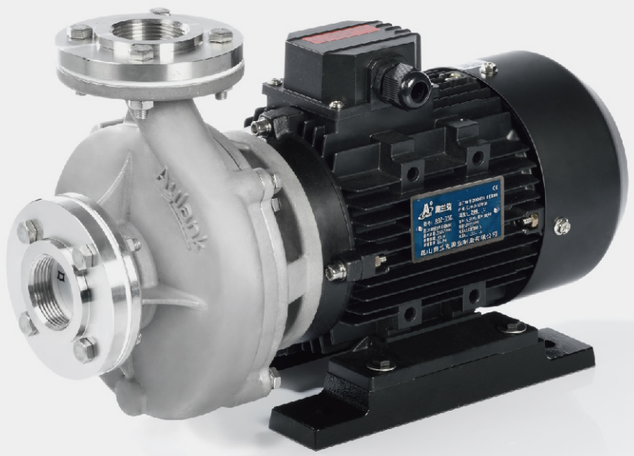

RGZ-75E

应用领域：模具控温、辊轮控温、反应釜夹套控温、热压模板控温、挤出料筒控温、冷热交换系统、食品设备等。

循环介质：不含颗粒、纤维的水、乙二醇、酒精、导热油、碳氢溶液、硅油、食用油等液体。

Application Area: Mold temperature controlling, Roller temperature controlling, Reaction kettle, Hot-pressing equipment,Extruding equipment, Hot and cold switching system etc，Food processing equipment .

Circulation Medium: Water，ethylene glycol, alcohol，thermal oil，hydrocarbon solution，silicone oil，edible oil and other liquids without particles and fibers.

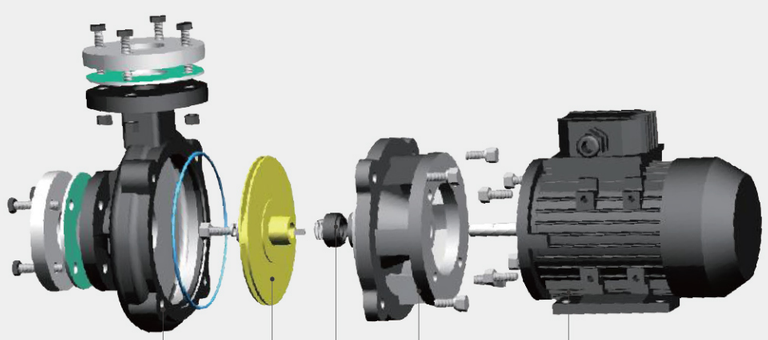

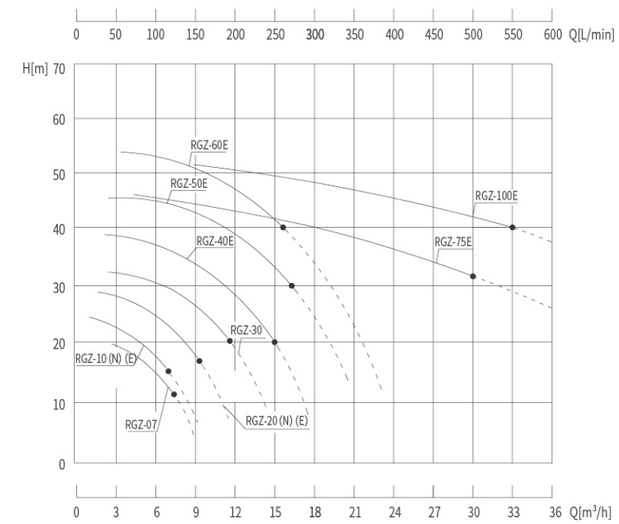

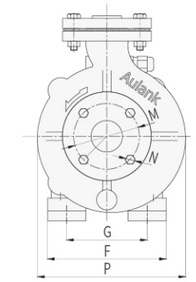

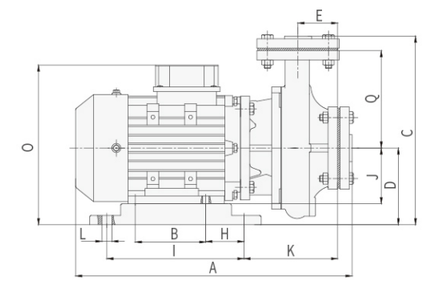

使用条件 / Working Condition

高温热水 Thermal Conductivity Water	高温导热油 Thermal Conductivity Oil	乙二醇 Ethylene glycol	工作环境温度 Working Temperature	最高海拔 Maximum Elevation	最大工作压力 Maximum Working Pressure
+5°C~+160°C	+5°C~+200°C	-30°C~+180°C	-5°C~+40°C	1000m	10bar

规格性能参数 / Technical Parameter

型号/Model	口径/Diameter		电机/Motor					性能参数/Performance Parameter		泵浦自重 Pump Weight (kg)
	进口 Inlet	出口 Outlet	功率 Power (kW)	匹数 (Hp)	电压 Voltage (V)	频率 Frequency (Hz)	转速 Speed (r/min)	最高扬程 Max Head (m)	最大/使用流量 Max/Use Capacity (L/min)	
RGZ-07	DN20	DN15	0.5	0.7	3Ø-380	50	2760	22	150/120	15
RGZ-10 (N) (E)	DN32	DN25	0.75	1	3Ø-380	50	2760	25	160/133	14
RGZ-20 (N) (E)	DN32	DN25	1.5	2	3Ø-380	50	2760	30	200/150	18.5
RGZ-30	DN50	DN32	2.2	3	3Ø-380	50	2760	36	240/188	33
RGZ-40E	DN50	DN32	3	4	3Ø-380	50	2900	40	300/255	32
RGZ-50E	DN50	DN40	4	5	3Ø-380	50	2900	45	367/267	55
RGZ-60E	DN50	DN40	4.5	6	3Ø-380	50	2900	52	400/285	60
RGZ-75E	DN65	DN50	5.5	7.5	3Ø-380	50	2900	45	750/500	63
RGZ-100E	DN65	DN50	7.5	10	3Ø-380	50	2900	52	1000/535	65

*上述性能参数对应于水在20℃时以正常速度运输，性能及参数误差±10%。泵的性能随输送流体介质的比重及密度的不同而产生变化。
*The above characteristic testing is based on the water transferring with the normal speed under 20 degrees. character'serror is about 10%. The pump characters change according to the difference of the liquid mediums' proportion and density.

*E代表不锈钢泵体。*The letter "E" means stainless steel pump body.

安装尺寸表 / Installation Size

型号/Model	A	B	C	D	E	F	G	H	I	J	K	L	M	N	O	P	Q
RGZ-07	325	80	246	100	63	120	100	-	-	63	-	4-Ø8	Ø78	4-Ø10	175	230	130
RGZ-10 (N) (E)	350	90	240	98	50.5	132	87	48.5	175	71	117.5	4-Ø13	Ø78	4-Ø10	200	Ø180	125
RGZ-20 (N) (E)	385	100	250	107	50.5	153	108	36.5	175	80	130.5	4-Ø13	Ø78	4-Ø10	220	Ø180	125
RGZ-30	430	125	274	117	55	170	122	50	245	90	132	4-Ø12	Ø94	4-Ø12	235	Ø210	135
RGZ-40E	480	140	278	127	55	195	142	50	245	100	152	4-Ø12	Ø94	4-Ø12	303	Ø204	135
RGZ-50E/60E	507	140	340	139	77	220	172	50	245	112	191	4-Ø12	Ø120	4-Ø15	320	Ø256	183
RGZ-75E	610	140	315	-	99	250	215	-	-	132	196	4-Ø14	Ø120	4-Ø15	320	Ø275	166
RGZ-100E	610	140	315	-	99	250	215	-	-	132	196	4-Ø14	Ø120	4-Ø15	320	Ø275	166

CPS
STAINLESS STEEL CENTRIFUGAL PUMP
不锈钢离心泵

耐腐蚀 体积小 不锈钢 低噪音 振动小 性能稳定

CPS-20L

应用领域：冷冻设备、洗碗设备、医疗清洗、水处理设备、管道增压、洗衣龙设备等。

循环介质：不含颗粒、纤维的水、乙二醇、酒精等液体。

Application Area: Chiller, Dish washing equipment, Medical cleaning, Water treatment equipment, Pipeline pressurization.

Circulation Medium: Water, ethylene glycol, alcohol and other liquids without particles and fibers.

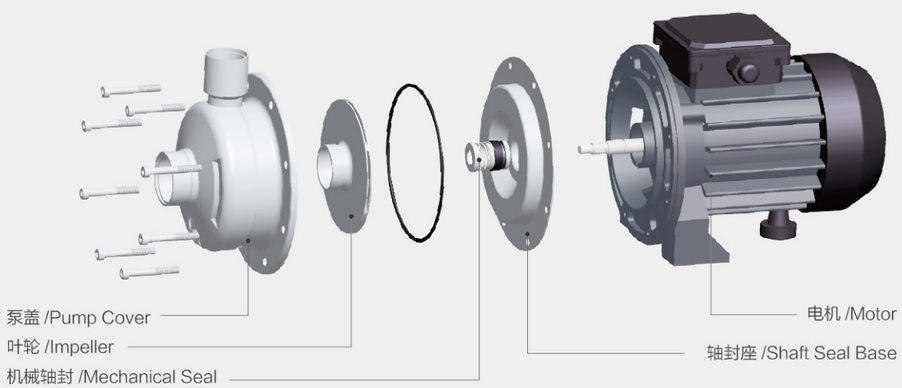

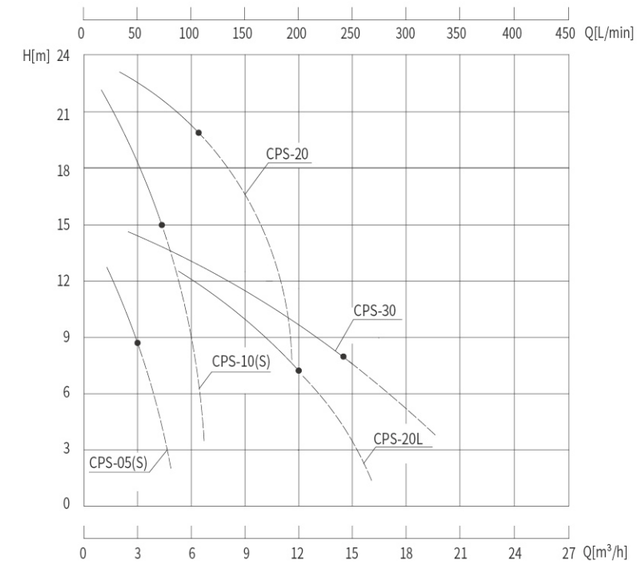

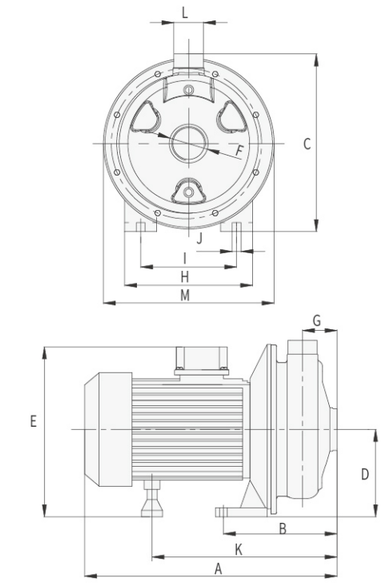

使用条件 / Working Condition

高温热水 Thermal Conductivity Water	乙二醇 Ethylene glycol	工作环境温度 Working Temperature	最高海拔 Maximum Elevation	最大工作压力 Maximum Working Pressure
+5°C~+90°C	-20°C~+90°C	-5°C~+40°C	1000m	6bar

规格性能参数 / Technical Parameter

型号/Model	口径/Diameter		电机/Motor					性能参数/Performance Parameter		泵浦自重 Pump Weight (kg)
	进口 Inlet	出口 Outlet	功率 Power (kW)	匹数 (Hp)	电压 Voltage (V)	频率 Frequency (Hz)	转速 Speed (r/min)	最高扬程 Max Head (m)	最大/使用流量 Max/Use Capacity (L/min)	
CPS-05 (S)	G1-1/4"	G1"	0.37	0.5	3Ø-380 1Ø-220	50	2760	15	75 / 50	7.5
CPS-10 (S)	G1-1/4"	G1"	0.75	1	3Ø-380 1Ø-220	50	2760	25	106 / 75	8.5
CPS-20	G1-1/2"	G1"	1.5	2	3Ø-380	50	2760	26	180 / 115	14.5
CPS-20L	G2"	G2"	1.5	2	3Ø-380	50	2760	15	300 / 200	18
CPS-30	G2-1/2"	G2"	2.2	3	3Ø-380	50	2900	16	400 / 240	21.5

*上述性能参数对应于水在20℃时以正常速度运输，性能及参数误差±10%。泵的性能随输送流体介质的比重及密度的不同而产生变化。
*The above characteristic testing is based on the water transferring with the normal speed under 20 degrees. character'serror is about 10%. The pump characters change according to the difference of the liquid mediums' proportion and density.

*S代表单项电源。*The letter "S" means single phase.

安装尺寸表 / Installation Size

型号/Model	A	B	C	D	E	F	G	H	I	J	K	L	M
CPS-05 (S)	288	132	199	90	184	Ø46	52.5	132.5	100	Ø8	213	Ø37	Ø171
CPS-10 (S)	315	137	222	110	214	Ø46	46	160	120	Ø11	233	Ø37	Ø213
CPS-20	357	133	223	110	233	Ø52	35	162	120	Ø11	250	Ø37	Ø213
CPS-20L	405	196.5	245	115	230	Ø65	84	180	140	Ø10	300	Ø65	Ø195
CPS-30	442	194.5	250	120	236	Ø80	87	175	140	Ø11	347.5	Ø65	Ø195

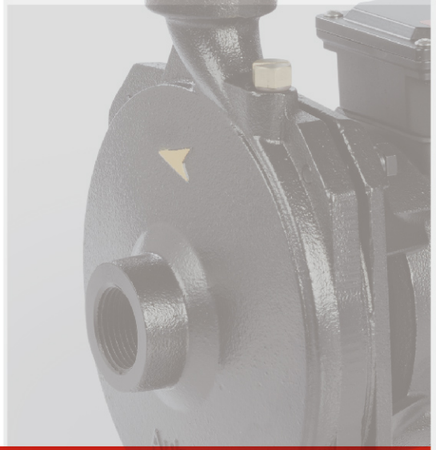

ISW
HORIZONTAL CENTRIFUGAL PUMP
卧式清水离心泵

体积小 铸铁 低噪音 振动小 性能稳定

ISW25-10

应用领域：冷冻设备、空调系统、管道增压、冷热交换设备等。

循环介质：不含颗粒、纤维的水等液体。

Application Area: Chiller, Air conditioning system, Pipeline pressurization, Hot and cold switching equipment.

Circulation Medium: Water, and other liquids without particles and fibers.

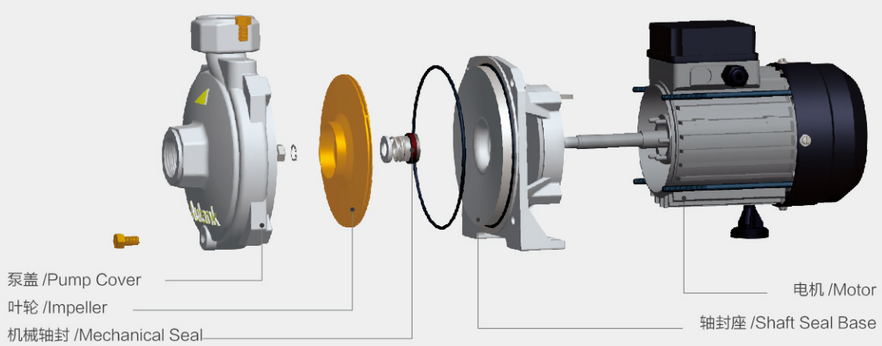

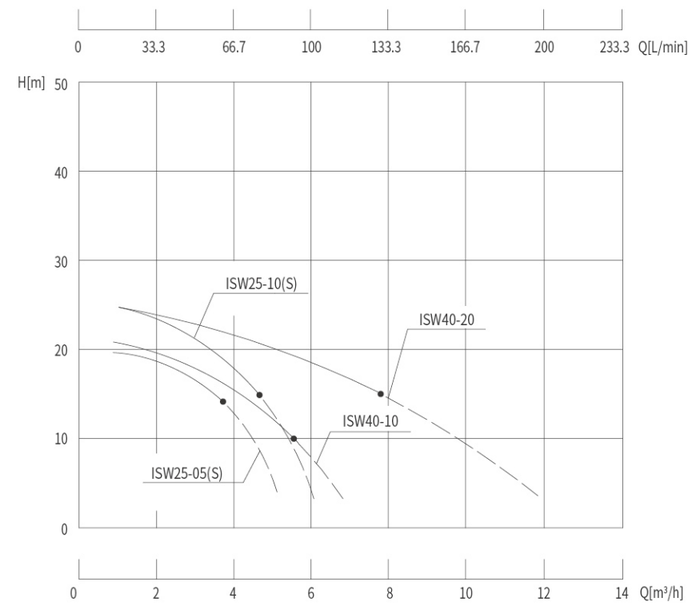

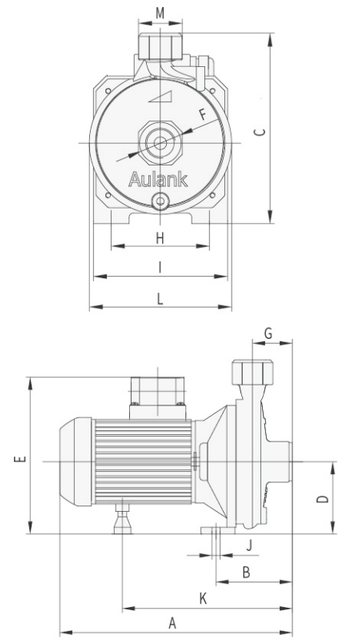

使用条件 / Working Condition

高温热水 Thermal Conductivity Water	乙二醇 Ethylene glycol	工作环境温度 Working Temperature	最高海拔 Maximum Elevation	最大工作压力 Maximum Working Pressure
+5°C~+90°C	-20°C~+90°C	-5°C~+40°C	1000m	6bar

规格性能参数 / Technical Parameter

型号/Model	口径/Diameter		电机/Motor					性能参数/Performance Parameter		泵浦自重 Pump Weight (kg)
	进口 Inlet	出口 Outlet	功率 Power (kW)	匹数 (Hp)	电压 Voltage (V)	频率 Frequency (Hz)	转速 Speed (r/min)	最高扬程 Max Head (m)	最大/使用流量 Max/Use Capacity (L/min)	
ISW25-05 (S)	G1"	G1"	0.37	0.5	3Ø-380 1Ø-220	50	2760	20	88 / 60	8
ISW25-10 (S)	G1"	G1"	0.75	1	3Ø-380 1Ø-220	50	2760	25	106 / 75	13
ISW40-10	G1-1/2"	G1-1/2"	0.75	1	3Ø-380	50	2760	22	123 / 90	13
ISW40-20	G1-1/2"	G1-1/2"	1.5	2	3Ø-380	50	2760	25	217 / 130	20.5

*上述性能参数对应于水在20℃时以正常速度运输，性能及参数误差±10%。泵的性能随输送流体介质的比重及密度的不同而产生变化。
*The above characteristic testing is based on the water transferring with the normal speed under 20 degrees. character'serror is about 10%. The pump characters change according to the difference of the liquid mediums' proportion and density.

*S代表单项电源。*The letter "S" means single phase.

安装尺寸表 / Installation Size

型号/Model	A	B	C	D	E	F	G	H	I	J	K	L	M
ISW25-05 (S)	280	94	207	84	183	Ø46.5	48	110	150	Ø10	205	159	49
ISW25-10 (S)	308	105	240	96	212	Ø50	43	140	180	Ø10	215	180	50
ISW40-10	317	94	227	93	200	Ø62	45	160	186	Ø8	231	186	62
ISW40-20	375	44	260	108.5	233	Ø66	57	160	208	Ø10	272	208	65

WRY

COUPLED HIGH TEMPERATURE OIL PUMP

联轴式高温热油泵

耐高温 铸铁 低噪音 振动小 性能稳定

WRY 50-32-170

应用领域：导热油炉、热处理设备、模板控温、辊轮控温、反应釜夹套控温等。

循环介质：不含颗粒、纤维的导热油、热处理油等液体。

Application Area: Thermal oil furnace,Heat treatment equipment,Template temperature controlling,Roller temperature controlling,Reaction kettle.

Circulation Medium: Thermal oil，heat treated oil and other liquids without particles and fibers.

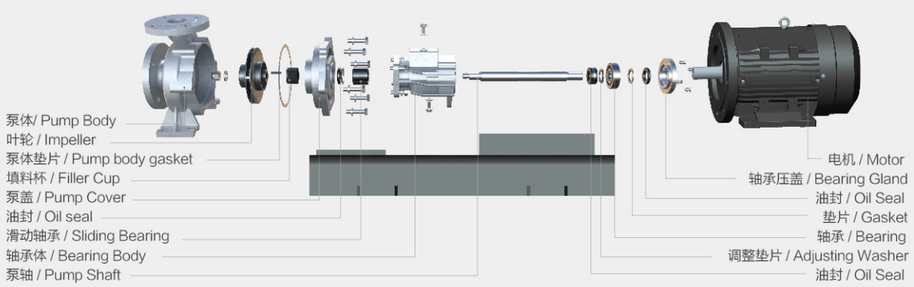

使用条件 / Working Condition

高温热油 Thermal Conductivity Oil	乙二醇 Ethylene glycol	最高海拔 Maximum Elevation	最大工作压力 Maximum Working Pressure
+5°C~+350°C	-5°C~+40°C	1000m	8bar

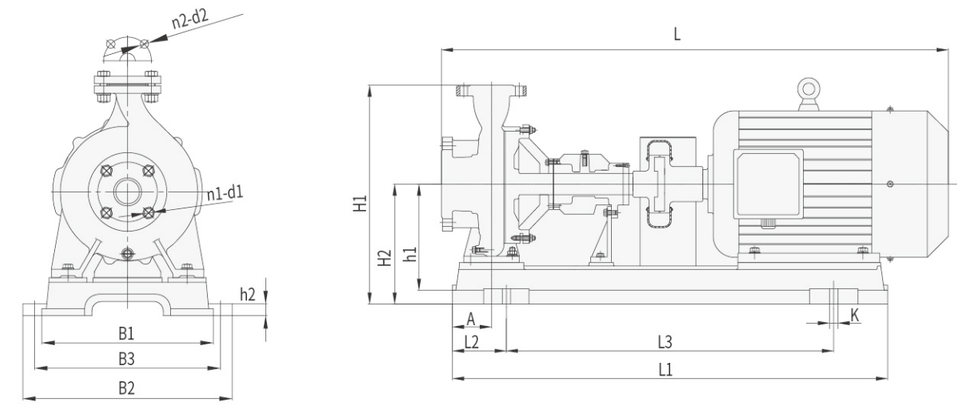

规格性能参数 / Technical Parameter

型号/Model	额定扬程 Rated Head (m)	额定流量 Rated Capacity (m^3/h)	转速 Speed (r/min)	功率 Power(kW)		效率% Efficiency	汽蚀余量 NPSH (m)
				轴功率 Shaft Power	配用功率 Motor Power		
WRY 25-20-125	20	3	2840	0.55	0.75	30	1.4
WRY 50-32-150A	25	5	2840	1.0	1.5	34	1.6
WRY 50-32-150	22	8	2840	1.1	1.5	43.5	1.8
WRY 50-32-160	25	10	2840	1.5	2.2	45.2	2.0
WRY 50-32-170	32	12.5	2900	2.4	3.0	45.7	2.4
WRY 65-50-170	32	29	2900	3.4	4.0	55.8	2.6
WRY 65-50-180	25	40	2900	4.5	5.5	60	2.7
WRY 65-50-180	38	20	2900	4.0	5.5	52	2.7
WRY 80-50-170	25	60	2900	6.7	7.5	61	2.9
WRY 80-50-180	40	40	2900	7.0	7.5	63	2.9
WRY 100-65-190	38	60	2900	9.1	11	68.2	3.1
WRY 80-50-200	50	50	2900	10.8	15	63	3.3
WRY 100-65-200	40	80	2900	12.4	15	70.7	3.9
WRY 100-65-220	50	60	2900	12.6	15	64.8	3.0
WRY 100-65-210	45	90	2900	15.7	18.5	70	3.6
WRY 100-65-230	55	100	2900	19.5	22	76.7	3.9
WRY 125-100-170	30	155	2900	17.3	22	75.1	5.5
WRY 100-65-250	70	100	2900	27.8	30	68.6	4.1
WRY 100-65-270	80	100	2900	32.4	37	67.2	3.6

安装尺寸表 / Installation Size

型号/Model	L	L1	L2	L3	B1	B2	B3	A	h1	h2	H1	H2	n1−d1	n2−d2	K
25-20-125	680	600	100	700	160	240	210	50	100	20	305	185	4-Ø14	4-Ø14	4-Ø14
50-32-150	780	695	100	520	240	340	296	80	110	25	350	190	4-Ø18	4-Ø18	4-Ø22
50-32-160	800	695	100	520	240	340	296	80	110	25	350	190	4-Ø18	4-Ø18	4-Ø22
50-32-170	825	740	100	520	240	340	296	80	132	25	370	210	4-Ø18	4-Ø18	4-Ø22
65-50-170	915	824	110	620	280	360	310	90	132	25	382	217	4-Ø18	4-Ø18	4-Ø22
65-50-180	990	885	100	650	280	385	350	100	160	25	425	245	4-Ø18	4-Ø18	4-Ø22
80-50-180	990	885	110	650	280	385	350	100	160	25	425	245	4-Ø18	4-Ø18	4-Ø22
80-50-200 100-65-190 100-65-200 100-65-220	1200	1020	160	732	400	510	450	110	180	25	525	300	8-Ø17.5	4-Ø17.5	4-Ø22
100-65-230 125-100-170 100-65-250 100-65-270	1300 1400	1160	150	935	440	580	505	115	200	35	570	320	8-Ø17.5	4-Ø17.5	4-Ø20

WRY-H

COUPLED HIGH TEMPERATURE OIL PUMP

联轴式高温热油泵

耐高温 铸铁 低噪音 振动小 性能稳定

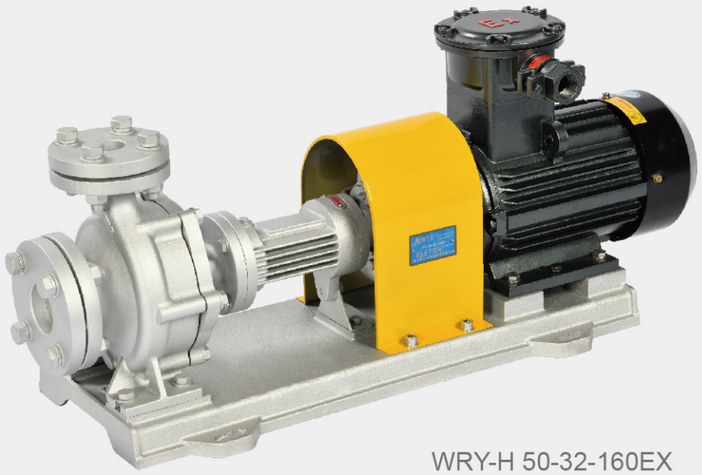

WRY-H 50-32-160EX

应用领域：导热油炉、热处理设备、模板控温、辊轮控温、反应釜夹套控温等。

循环介质：不含颗粒、纤维的导热油、热处理油等液体。

Application Area: Thermal oil furnace,Heat treatment equipment,Template temperature controlling,Roller temperature controlling,Reaction kettle.

Circulation Medium: Thermal oil，heat treated oil and other liquids without particles and fibers.

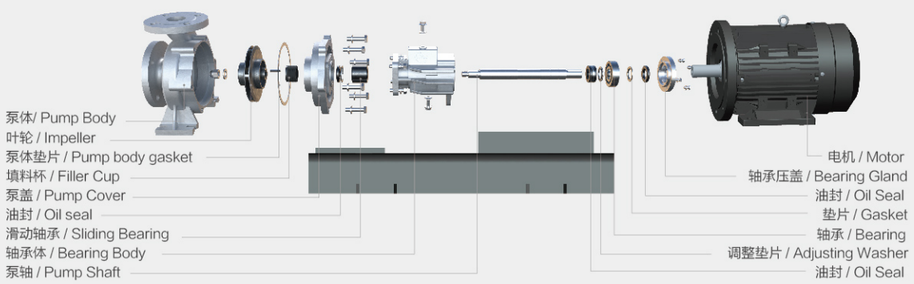

使用条件 / Working Condition

高温热油 Thermal Conductivity Oil	乙二醇 Ethylene glycol	最高海拔 Maximum Elevation	最大工作压力 Maximum Working Pressure
+5°C~+350°C	-5°C~+40°C	1000m	10bar

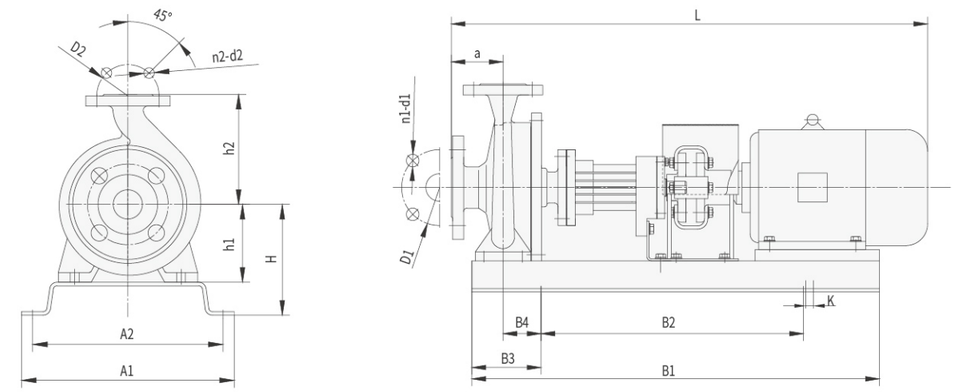

规格性能参数 / Technical Parameter

型号/Model	额定扬程 Rated Head (m)	额定流量 Rated Capacity (m^3/h)	转速 Speed (r/min)	功率 Power(kW) 轴功率 Shaft Power	功率 Power(kW) 配用功率 Motor Power	效率% Efficiency	汽蚀余量 NPSH (m)
20-20-125	22	1.5	2840	0.11	0.75	30	2
32-32-160	28	6	2840	1.31	1.5	35	2.3
40-25-160	28	10	2840	1.73	2.2	44	2.3
50-32-160	30	12.5	2900	2.17	3.0	47	2.3
50-32-200	50	12.5	2900	4.3	5.5	40	2.5
50-32-200A	32	16	2900	3.7	4.0	38	2.6
50-32-250	80	12.5	2900	8.5	11	32	2.5
50-32-250A	60	16	2900	8.7	11	30	2.5
65-50-160	32	20	2900	3.17	4.0	55	2.5
65-40-200	50	25	2900	6.5	7.5	52	2.5
65-40-200A	35	25	2900	4.6	5.5	52	2.5
65-40-250	80	25	2900	11.8	15	46	3.0
65-40-250A	51	20	2900	6.3	7.5	44	3.1
65-40-315	125	25	2900	22.4	30	38	3.0
65-40-315A	100	22.5	2900	17	22	36	2.9
80-50-200	50	50	2900	10.8	15	61	3.0
80-50-200A	40	45	2900	8.2	11	60	3.0
80-50-250	80	50	2900	19.1	22	57	3.0
80-50-250A	60	43	2900	12.8	15	55	3.1
80-50-315	125	50	2900	33.41	45	51	3.0
80-50-315A	100	45	2900	24.51	30	50	3.2
100-65-200	55	100	2900	18.5	22	69	4.0
100-65-200A	44	94	2900	16.11	22	70	4.1
100-65-200B	38	87	2900	13.22	15	68	4.2
100-65-250	83	100	2900	33.74	37	67	4.3

安装尺寸表 / Installation Size

型号/Model	A1	A2	B1	B2	B3	B4	a	H	h1	h2	D1	D2	n1-d1	n2-d2	K	L
20-20-125	270	240	500	300	90	47.5	62	130	84	115	75	75	4-Ø14	4-Ø14	4-Ø14	580
32-32-160	313	280	600	380	105	37	75	160	106	135	100	100	4-Ø18	4-Ø18	4-Ø14	665
40-25-160	313	280	600	380	105	37	75	160	106	150	110	85	4-Ø18	4-Ø14	4-Ø14	695
50-32-160	330	300	740	500	115	55	80	174	116	160	125	100	4-Ø18	4-Ø18	4-Ø14	857
50-32-200(A)	405	365	800	515	138	83	80	193	132	180	125	100	4-Ø18	4-Ø18	4-Ø19	952
65-50-160	405	365	800	515	138	83	80	193	132	160	145	125	4-Ø18	4-Ø18	4-Ø18	877
65-40-200(A)	406	365	800	515	138	79.5	100	209	148	180	145	110	4-Ø18	4-Ø18	4-Ø19	972
80-50-200B	406	365	800	515	138	85	100	210	160	200	160	125	8-Ø18	8-Ø18	4-Ø19	972
50-32-250(A)	416	390	925	600	166	98	100	273	180	225	125	100	4-Ø18	4-Ø18	4-Ø25	1097
80-50-200	430	380	950	600	145	90	100	216	160	200	160	125	8-Ø18	8-Ø18	4-Ø23	1097
100-65-200(A)	470	420	1055	625	190	110	100	255	180	225	180	145	8-Ø18	4-Ø17.5	4-Ø25	1167
100-65-200B	470	420	1055	625	190	110	100	255	180	225	180	145	8-Ø17.5	4-Ø17.5	4-Ø25	1161
100-65-250	460	430	1280	840	220	130	125	305	200	250	180	145	8-Ø18	4-Ø28	4-Ø25	1422

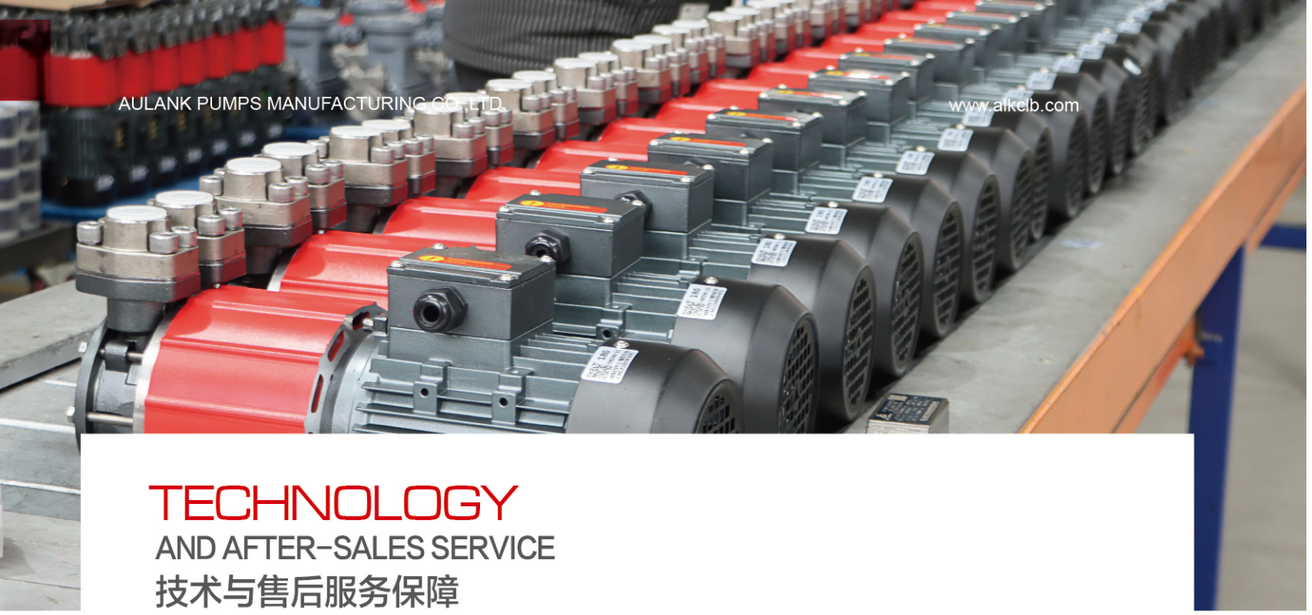

TECHNOLOGY
AND AFTER-SALES SERVICE
技术与售后服务保障

PRE-SALES
售前

TECHNICAL SUPPORT
技术支持

技术对接咨询服务
Technical docking consulting services

行业应用服务方案
Industry application service solutions

产品OEM定制开发
Product OEM custom development

SELLING
售中

APPLICATION SERVICES
应用服务

保障快交准交服务
Ensure fast delivery and punctual delivery services

全程技术应用指导
Technical application guidance throughout the process

提供安装调试服务
Provide installation and commissioning services

AFTER-SALE
售后

PROFESSIONAL SERVICE
专业服务

快速响应专业服务
Quick response professional services

提供产品升级解决方案
Provide product upgrade solutions

提供售后维修保养服务
Provide after-sales maintenance services

SUBASSEMBLY CORE
核心配件

机械密封安装尺寸图/尺寸表 /Mechanical Seal Installation Sketch

型号/Model	A	B	C	D	E
10mm	Ø19	Ø10	8	11	21
12mm	Ø25.4	Ø12	8	11.2	23
14mm	Ø29.8	Ø14	8.5	11	28
16mm	Ø31.7	Ø15.87	10	14.6	32
19mm	Ø34.9	Ø19	8.5	13	32
25mm	Ø41.4	Ø25	8.8	15.2	34
32mm	Ø50.4	Ø32	13	16.5	42
10mm-2051	Ø19	Ø10	8	11	21
12mm-4081	Ø21.6	Ø12	9.5	10.5	24.5
16mm-5081	Ø35.5	Ø16	8.5	12.2	32
22mm-6091	Ø34.9	Ø22	8.5	13	33.5

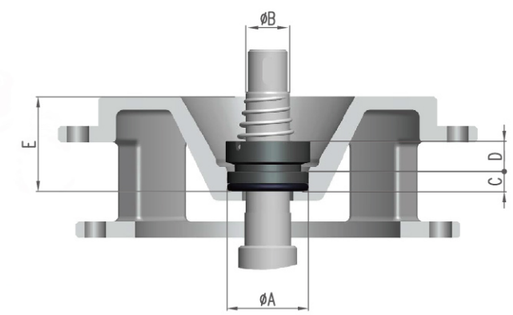

机械密封
Mechanical Seal

旋涡式叶轮
Vortex Impeller

离心磁力泵配件
Centrifugal Magnetic Pump Accessories

旋涡磁力泵配件
Vortex Magnetic Pump Accessories

☆ 本公司保留技术更改的权利，如有修改恕不另行通知。The company reserves the right to change the technology, if there is any change without notice

APPLICATION CASE
应用案例

公司开发制造的高低温泵，在化工，制药、半导体、医疗、汽车、食品、橡胶、焊接、印染、储能、冻干等领域，成功替代进口品，应用在-196℃～+400℃高低温冷热交换设备、精细化工项目、制药化工设备，得到客户和市场的认可。

The high and low temperature pump developed and manufactured by the company has successfully replaced imported products in the fields of pharmacy, chemical industry, semiconductor, medical treatment, automobile, food, rubber, welding, printing & dyeing etc., and has been applied in the high and low temperature and heat exchange equipment at −120° C ~+350° C, which has been recognized by customers and the market.

制药、化工、实验
Pharmacy,Chemical industry,
Experiment

制药TCU温度控制单元
Pharmaceutical TCU
temperature control unit

模具、辊轮、反应釜控温
Mold roller reactor
temperature control

光伏层压控温
Photovoltaic(PV) lamination
temperature control

新能源检测
New energy testing

锂电池、电解液材料制程应用
Lithium battery, electrolyte material
process application

GROUPED
EQUIPMENT
配套设备

铝镁压铸模温机
Aluminum magnesium die
casting mold temperature machine

新能源高低温一体机
New energy high and low
temperature integrated machine

光学模组精密模温机
Optical module precision
mold temperature machine

半导体精密温控
Semiconductor precision
temperature control

HONORARY CLIENT
荣誉客户

AODE奥德 · SHINVA 新华医疗 · HITACHI Inspire the Next 日立 · 中国中车 CRRC · SMEE 微电子装备 · YIZUMI 伊之密

清华大学 Tsinghua University · Vinda 维达 · HANBELL 上海汉钟精机股份有限公司 SHANGHAI HANBELL PRECISE MACHINERY CO., LTD · Panasonic 松下电器 · HAN'S LASER 大族激光

PANSTONE 磐石油压 · JING HONG · CETC 中国电子科技集团有限公司 · MAPLAN 玛普兰 · HIMILE GROUP 豪山集团 · 滨海石化

太和气体 · SRICI 上海化工研究院检测中心 · 瑞博龙 · 恒兴化工 · 聚发生物 · 吉星化工 JEEING CHEMICAL INDUSTRY